SSP 57235

Middeck Active Control Experiment (MACE) II Hardware Interface Control Document

International Space Station Program

August 2, 2000

TYPE 1 – NASA APPROVAL PENDING

National Aeronautics and Space Administration
International Space Station Program
Johnson Space Center
Houston, Texas
Contract No. NAS15–10000 (PA16)

REV.	DESCRIPTION	PUB. DATE
–	INITIAL RELEASE (Reference per SSCD_____, EFF. _____)	TBD

INTERNATIONAL SPACE STATION

MIDDECK ACTIVE CONTROL EXPERIMENT (MACE) II HARDWARE INTERFACE CONTROL DOCUMENT

AUGUST 2, 2000

PREFACE

This Interface Control Document (ICD) Template is the exclusive document used by National Aeronautics & Space Administration (NASA), the European Space Agency (ESA), and the NASA payload developer to identify and establish the pressurized payload physical / functional interfaces and to control the designs of these pressurized payload interfaces. This document contains the design implementation of the interface requirements in the Pressurized Payloads Interface Requirements Document (IRD), SSP 57000. Both sides of the interface are described and includes mechanical, structural, electrical, avionics, and functional interfaces. The applicability of these interfaces will depend upon the characteristics of the integrated rack payloads as specified in SSP 57135, Middeck Active Control Experiment (MACE) II Payload Integration Agreement (PIA). The interfaces outlined in this document are mandatory and may not be violated unless specifically agreed upon by the Payload Control Board (PCB). This document is under the control of the PCB, and changes or revisions will be approved by the PCB.

APPROVED BY: _____

Richard Nygren
Manager, Space Station Payloads Office
NASA/OZ

APPROVED BY: _____

Capt. Thomas Hoge
Department of Defense Payloads/ZR1

INTERNATIONAL SPACE STATION

MIDDECK ACTIVE CONTROL EXPERIMENT (MACE) II
HARDWARE INTERFACE CONTROL DOCUMENT

AUGUST 2, 2000

CONCURRENCE

PREPARED BY:	Craig W. Spease	Boeing/TBE
	PRINT NAME	ORGN
	/s/ Craig W. Spease	8–3–00
	SIGNATURE	DATE
CHECKED BY:	Michael A. Soutullo	Boeing/TBE
	PRINT NAME	ORGN
	/s/ Michael A. Soutullo	8–4–00
	SIGNATURE	DATE
SUPERVISED BY (BOEING):	Wade Geiger	Boeing
	PRINT NAME	ORGN
	/s/ Wade C. Geiger	8–4–00
	SIGNATURE	DATE
	Mo Saiidi	Boeing
	PRINT NAME	ORGN
	/s/ Mo Saiidi	8–4–00
	SIGNATURE	DATE
SUPERVISED BY (NASA):	Mike Horkachuck	NASA/OZ3
	PRINT NAME	ORGN
	/s/ Michael J. Horkachuck	8–7–00
	SIGNATURE	DATE
DQA:	David Henderson	Boeing
	PRINT NAME	ORGN
	/s/ David M. Henderson	8–7–00
	SIGNATURE	DATE

INTERNATIONAL SPACE STATION

MIDDECK ACTIVE CONTROL EXPERIMENT (MACE) II HARDWARE INTERFACE CONTROL DOCUMENT

LIST OF CHANGES

AUGUST 2, 2000

All changes to paragraphs, tables, and figures in this document are shown below:

SSCBD	ENTRY DATE	CHANGE	PARAGRAPH(S)

TABLE OF CONTENTS

PARAGRAPH		PAGE
1.0	INTRODUCTION	1 – 1
1.1	PURPOSE	1 – 1
1.2	SCOPE	1 – 1
1.3	USE	1 – 1
1.4	PAYLOAD DESCRIPTION	1 – 2
2.0	DOCUMENTATION	2 – 1
2.1	APPLICABLE DOCUMENTS	2 – 1
3.0	PAYLOAD INTERFACE	3 – 1
3.1	MECHANICAL INTERFACES	3 – 1
3.1.1	HARDWARE	3 – 1
3.1.1.1	MACE II HARDWARE	3 – 1
3.1.2	ON–ORBIT CONFIGURATION	3 – 2
3.1.3	EQUIPMENT MOUNTING	3 – 5
3.1.4	UTILITY OUTLET PANEL (UOP) INTERFACE – NODE 1	3 – 5
3.2	ELECTRICAL POWER INTERFACE	3 – 7
3.2.1	UTILITY OUTLET PANEL – NODE 1	3 – 7
3.2.1.1	UTILITY OUTLET PANEL CONNECTOR PIN ASSIGNMENTS	3 – 7
3.2.2	ELECTRICAL CHARACTERISTICS	3 – 8
3.2.3	CIRCUIT PROTECTION	3 – 12
3.2.4	IMPEDANCE CHARACTERISTICS	3 – 15
3.2.4.1	LOAD IMPEDANCE CHARACTERISTICS	3 – 15
3.2.4.2	SOURCE IMPEDANCE CHARACTERISTICS	3 – 16
3.3	COMMAND AND DATA HANDLING (C&DH) INTERFACE	3 – 18
3.3.1	DATA FLOW DESCRIPTION	3 – 18
3.4	CABIN AIR HEAT LEAK	3 – 18
3.5	ENVIRONMENTAL INTERFACES	3 – 18
3.5.1	NODE 1 ATMOSPHERIC ENVIRONMENT	3 – 18
3.5.1.1	PRESSURE	3 – 18
3.5.1.2	TEMPERATURE	3 – 18
3.5.1.3	HUMIDITY	3 – 19
3.5.2	ACOUSTICS	3 – 19
3.5.2.1	INTERMITTENT NOISE	3 – 19
4.0	APPLICABILITY MATRIX	4 – 1
4.1	PURPOSE	4 – 1
4.2	ORGANIZATION	4 – 1
5.0	EXCEPTIONS	5 – 1

TABLE OF CONTENTS (Continued)

PARAGRAPH PAGE

APPENDIX

A	ABBREVIATIONS AND ACRONYMS	A – 1
B	GLOSSARY OF TERMS	B – 1
C	EXCEPTIONS AND OPEN ITEMS	C – 1

TABLES

TABLE		PAGE
3.1.1.1–1	MACE II HARDWARE LIST	3 – 1
3.1.4–1	UOP CONNECTOR PART NUMBERS	3 – 5
3.2.2–1	ELECTRICAL POWER CHARACTERISTICS	3 – 9
3.2.3–1	DETAILED UPSTREAM PROTECTION CHARACTERISTICS	3 – 13
3.4–1	THERMAL INTERFACE	3 – 18
3.5.2.1–1	INTERMITTENT NOISE LIMITS	3 – 19
4.2–1	APPLICABILITY MATRIX	4 – 2
5–1	EXCEPTIONS	5 – 1
C–1	TO BE DETERMINED ITEMS	C – 1
C–2	TO BE RESOLVED REQUIREMENTS	C – 1

FIGURES

FIGURE		PAGE
1.3–1	PAYLOAD INTERFACE REQUIREMENTS AND CONTROL PROCESS	1 – 2
1.4–1	EXPERIMENT SUPPORT MODULE (FRONT VIEW)	1 – 3
1.4–2	MACE II BLOCK DIAGRAM	1 – 4
3.1.2–1	MACE II ON–ORBIT CONFIGURATION	3 – 3
3.1.4–1	UOP CONNECTOR LAYOUT	3 – 6
3.2.1–1	UOP LOCATION	3 – 7
3.2.1.1–1	UOP ELECTRICAL POWER/1553 CONNECTOR PIN ASSIGNMENTS	3 – 8
3.2.2–1	MACE II ELECTRICAL SCHEMATIC	3 – 10
3.2.2–2	MACE II SURGE CURRENT USING UOP RPC SOFT START/STOP	3 – 11
3.2.2–3	MACE II SURGE CURRENT WITHOUT USING UOP RPC SOFT START/STOP	3 – 12
3.2.3–1	MACE II OVERLOAD PROTECTION CHARACTERISTICS	3 – 13
3.2.3–2	NODE 1 UOP OVERLOAD PROTECTION CHARACTERISTICS	3 – 14
3.2.4.1–1	MACE II IMPEDANCE CHARACTERISTICS	3 – 16
3.2.4.2–1	10–12 AMPERE INTERFACE C POWER SOURCE IMPEDANCE LIMITS	3 – 17

1.0 INTRODUCTION

1.1 PURPOSE

This Interface Control Document (ICD) is the primary source of design implementation and specific interfaces between the MACE II payload and the ISS (on–orbit). The ICD controls the ISS and payload interfaces of the MACE II payload for integration into the ISS Node 1 module. The physical, functional, and environmental design implementation associated with payload safety and interface compatibility are included herein.

1.2 SCOPE

The interfaces defined in this document apply to transportation and on-orbit phases of the payload mission cycle. Transportation interfaces are specific to the Spacehab module and the MPLM. The reader is referred to NSTS 21000-IDD-MDK for requirements related to transportation in the Shuttle middeck area and SSP 50467, Cargo Stowage Technical Manual, for requirements related to ISS stowage.

1.3 USE

Section 3 of this document contains design implementation and module specific interface requirements to the MACE II design information. Section 4 documents the applicability of SSP 57000 requirements to the MACE II design. Section 5 contains a table that lists exceptions to requirements in SSP 57000 or interfaces defined in this document. Figure 1.3–1 shows the inter–relationship of the IRD, ICD Template, and this ICD.

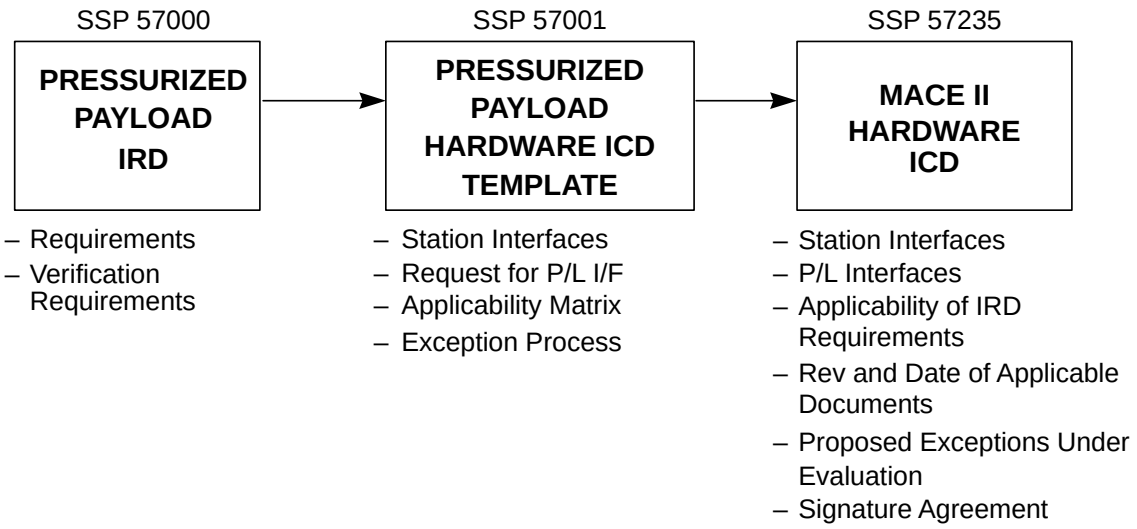

FIGURE 1.3–1 PAYLOAD INTERFACE REQUIREMENTS AND CONTROL PROCESS

1.4 PAYLOAD DESCRIPTION

The MACE II payload provides a test bed for studying the interaction of automatic control systems with dynamic space structures in ways which are not feasible in the Earth–bound 1–g environment. The focus of the MACE II project will be to examine the performance of controlled payloads performing pointing and tracking tasks on the Multibody Platform (MBP).

The MACE II experiment consists of two types of hardware elements, the Experiment Support Module (ESM) and the MBP. The ESM, shown in Figure 1.4–1, contains the data storage, realtime control computer, actuator power amplifiers, signal conditioning and operator interface typical of a dynamics and control laboratory. The MBP is a sub–scale module of the multi–segment spacecraft with reaction wheels, gimbals, and associated actuators and sensors. A block diagram of the MACE II operational configuration is shown in Figure 1.4–2.

MACE II will be stowed in Cargo Transfer Bags (CTBs), equal in volume to three Middeck Locker Equivalents (MLE), during launch and transfer on orbit. The ESM will be contained in one MLE and the MBP and other associated hardware will be contained in the remaining two MLE. The MACE II hardware is passively stowed during ascent and entry and, therefore, can be stowed either in the middeck, the Spacehab, or the MPLM. Once on orbit, the hardware will be transferred by the crew to the ISS. The ESM will require stowage in a rack–mounted locker with a modified locker door and will also require power during MACE II payload operations. The ESM can be operated outside of the locker if required. The remaining stowage items can be transferred and stowed in any available ISS stowage volume.

During payload operations, the crew will initially assemble the MBP and connect it to the ESM using a ten foot umbilical. The ESM can be operated outside of its stowage locker if necessary in order for the umbilical to reach the area where the MBP is being operated. The crew will then execute a warm–up procedure. This will prepare the hardware for testing and also allow the crew to familiarize themselves with the hardware. During on–orbit test operations, the MBP will be free floated or lightly tethered to prevent drifting and collision with other objects. The crew will operate the various science protocols in 1 to 4 hour increments while observing and documenting the results. These observations as well as data accumulated by the ESM (on Portable Computer Memory Card International Adapter (PCMCIA) cards) can be downlinked to the ground to allow the Principle Investigator (PI) an opportunity to modify the science protocol prior the next scheduled MACE II operations. After a minimum of 72 hours, the modified programs can be uplinked back to the crew for use during the next payload run.

FIGURE 1.4–1 EXPERIMENT SUPPORT MODULE (FRONT VIEW)

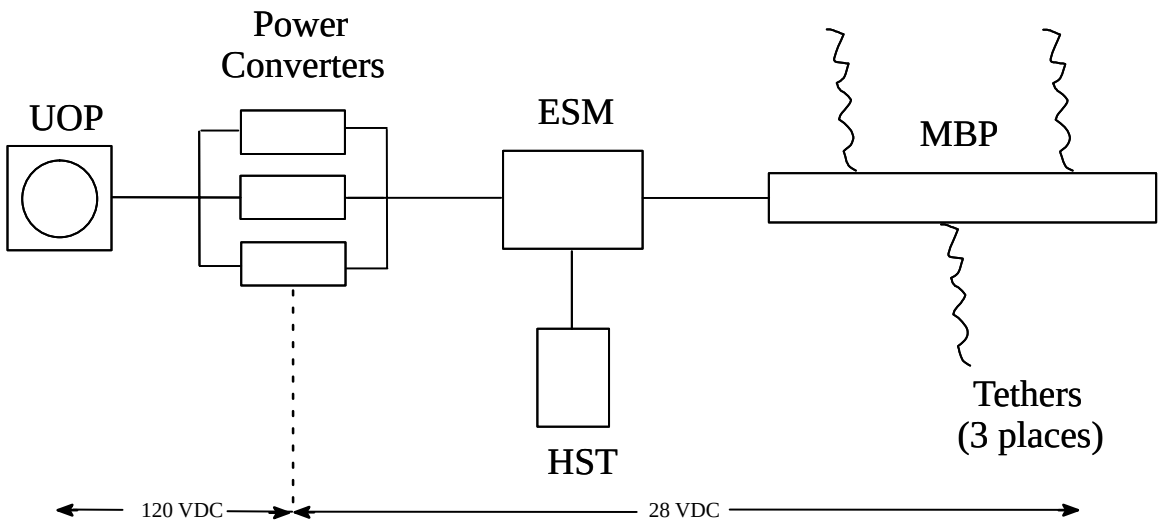

FIGURE 1.4–2 MACE II BLOCK DIAGRAM

2.0 DOCUMENTATION

The documents in this section form a part of this specification to the extent specified herein. In the event of a conflict between the documents referenced and the contents of this ICD, the contents of this ICD shall be considered a superseding requirement. Subsequent revisions to these documents that effect changes to content or context of the requirements contained in this ICD must be evaluated for impact to the MACE II hardware design before incorporation into this document.

2.1 APPLICABLE DOCUMENTS

DOCUMENT	TITLE
MIL–STD–1686 Rev. C October 25, 1995	Electrostatic Discharge Control Program for Protection of Electrical and Electronic Parts, Assemblies and Equipment (Excluding Electrical Initiated Explosive Devices) Document
MSFC–STD–531 September, 1978	High Voltage Design Criteria
NASA TM 102179 July, 1991	Selection of Wires and Circuit Protective Devices for STS Orbiter Vehicle Payload Electrical Circuits
NSTS 1700.7B, ISS Add. December, 1995	Safety Policy and Requirements for Payloads using the International Space Station System
NSTS 18798 B, TA–92–038 February 22, 1993	Protection of Payload Electrical Power Circuits
NSTS 18798 B, MA2–95–048 September 26, 1995	Thermal Limits for Intravehicular Activity (IVA) Touch Temperatures
NSTS 18798 B, MA2–97–093 March 17, 1998	Crew Mating/Demating of Powered Connectors
NSTS 21000–IDD–MDK, Rev. B August 15, 1996	Middeck Interface Definition Document
SN–C–0005, Rev. D July 20, 1998	Space Station Contamination Control Requirements
SSP 30233, Rev. E January 27, 1995	Space Station Requirements or Material and Processes
SSP 30237, Rev. C May 31, 1996	Space Station Requirements for Electromagnetic Emission and Susceptibility Requirements
SSP 30240, Rev. B June 3, 1994	Space Station Grounding Requirements
SSP 30242, Rev. D May 31, 1996	Space Station Cable/Wire Design and Control Requirements for Electromagnetic Compatibility
SSP 30243, Rev. D May 31, 1996	Space Station Requirements for Electromagnetic Compatibility

SSP 30245, Rev. B June 3, 1994	Space Station Electrical Bonding Requirements
SSP 30257, Rev. E November 22, 1996	Space Station Program Intravehicular Activity Restratints and Mobility Aids Standard Interface Control Document
SSP 30312, Rev. F March 31, 1995	Electrical, Electronic, and Electromechanical (EEE) and Mechanical Parts Management and Implementation Plan for Space Station Program
SSP 30482, Vol. 1, Rev. B January 1996 DCN002 December 9, 1996	Electric Power Specifications and Standards, Volume 1: EPS Electrical Performance Specifications
SSP 30512, Rev. C June 3, 1994	Ionizing Radiation Design Environment
SSP 41002, Rev. G June 15, 1997	International Standard Payload Rack to NASA/NASDA Modules Interface Control Documents
SSP 41017, Rev. A October 22, 1996	Rack to Mini Pressurized Logistics Module Interface Control Document (ICD) Part 1
SSP 42122, Rev. September 30, 1998 IRN 42122–0016 April 12, 1999 IRN 42122–0019 October 16, 1998	Resource Node 1 to Pressurized Mating Adapter–1 Interface Control Document, Part 1
SSP 50005, Rev. B August 9, 1995	International Space Station Flight Crew Integration Standard (NASA–STD–3000/T)
SSP 50467	Cargo Stowage Technical Manual
SSP 52051, Vol. 1 December 6, 1999	User Electric Powr Specifications and Standards, Volume 1: 120 Volt DC Power
SSP 57001, Rev. C	Pressurized Payloads Hardware Interface Control Document Template
SSP 57000, Rev. E April 21, 2000	Pressurized Payloads Interface Requirements Document
SSP 57010, Rev. B May 24, 2000	Pressurized Payloads Generic Payload Verification Plan
S684–10102H September 30, 1998	Prime Item Development Specification for Node 1

3.0 PAYLOAD INTERFACE

3.1 MECHANICAL INTERFACES

3.1.1 HARDWARE

3.1.1.1 MACE II HARDWARE

A list of the MACE II hardware, including weights and dimensions, is provided in Table 3.1.1.1–1.

TABLE 3.1.1.1–1 MACE II HARDWARE LIST

NOMENCLATURE	PART NUMBER	QTY	WEIGHT lb. (kg)	DIMENSIONS In. (cm)
Experiment Support Module (ESM)	MACE–1–930	1	53.82 (24.41)	16.3 x 9.0 x 19.3 (41.4 x 23 x 49.0)
HST w/ umbilical	MACE–1–929	1	3.06 (1.39)	8.25 x 5.12 x 2.38 (21.0 x 13.0 x 6.05) w/cable 120 x .25 diam (305 x 0.64)
Intermediate Node (Primary)	MACE–1–913–P	1	1.56 (0.708)	2.5 x 2.5 x 5.13 (6.4 x 6.4 x 13.0)
Intermediate Node (Secondary)	MACE–1–913–S	1	1.56 (0.708)	2.5 x 2.5 x 5.13 (6.4 x 6.4 x 13.0)
Corner Node	MACE–1–924	1	1.47 (0.667)	2.5 x 2.5 x 5.13 (6.4 x 6.4 x 13.3)
Outer Strut (Primary)	MACE–1–925–PO	1	1.77 (0.803)	13.25 x 2.0 diam (33.66 x 5.1)
Inner Strut (Secondary)	MACE–1–925–SI	1	1.77 (0.803)	13.25 x 2.0 diam (33.66 x 5.1)
Outer Strut (Secondary)	MACE–1–925–SO	1	1.77 (0.803)	13.25 x 2.0 diam (33.66 x 5.1)
Active Strut	MACE–1–926	1	2.11 (0.957)	13.25 x 2.0 diam (33.66 x 5.1)
Inertia Wheel Assembly	MACE–1–915	1	32.94 (14.94)	11.8 x 8.75 x 11.8 (30.0 x 22.2 x 30.0) w/cable 120 x .75 diam (305 x 1.9)
Primary Gimbal	MACE–1–920–P	1	14.71 (6.672)	13.5 x 14.75 x 8.0 (34.3 x 37.47 x 20)
Secondary Gimbal	MACE–1–920–S	1	14.71 (6.672)	13.5 x 14.75 x 8.0 (34.3 x 37.47 x 20)
Flexible Appendage, Primary Inner	MACE–2–923–PI	1	0.53 (0.24)	13.5 x 1.55 diam (34.3 x 3.94)
Flexible Appendage, Primary Outer	MACE–2–923–PO	1	1.58 (0.717)	13.5 x 1.55 diam (34.3 x 3.94)
Flexible Appendage, Secondary Inner	MACE–2–923–SI	1	0.53 (0.24)	13.5 x 1.55 diam (34.3 x 3.94)
Flexible Appendage, Secondary Outer	MACE–2–923–SO	1	1.58 (0.717)	13.5 x 1.55 diam (34.3 x 3.94)
MACE II PCMCIA Hard Disk	MACE–2–999	13	0.22 (0.10)	3.65 x 4.35 x 1.20 (9.27 x 11.0 x 3.0)
Tether Pouch	MACE–1–940	1	0.26 (0.12)	4.7 x 3.8 x 0.05 (12 x 9.7 x 0.13)
Laser Pointer	MACE–1–927–3	1	0.08 (0.04)	5.78 x 0.55 diam. (14.7 x 1.4)
AAA Battery	528–41350–2	4	0.02 (0.01)	1.2 x 0.25 diam (3.0 x 0.64)
Ku–Band Power Supply (Modified)	SEG46116711–302	3	6.56 (2.98)	16.5 x 9.5 x 3 (6.5 x 3.7 x 1.2)
UOP to Power Supplies Cable	MACE–1–ISS–NC	1	2 (0.9)	Coiled 6 x 6 x 1.5 (2.4 x 2.4 x 0.6)
Power Supplies to MACE II Cable	MACE–1–ISS–CESM	1	2 (0.9)	Coiled 6 x 6 x 1.5 (2.4 x 2.4 x 0.6)

3.1.2 ON–ORBIT CONFIGURATION

During MACE II payload operations, the MBP will be tethered to a Seat Track Equipment Anchor (STEA) using three payload–provided tethers. The ESM will be tethered to the Node 1 structure at a convenient location within 10 feet of the MBP power and data connector. Each tether has a clip on one end and a Velcro strap on the opposite end. The tether clip attaches to the MBP at attach points on the MBP Nodes. The Velcro strap will attach to existing Velcro or be tied to the STEA.

The MACE II payload on–orbit configurations are shown in Figure 3.1.2–1

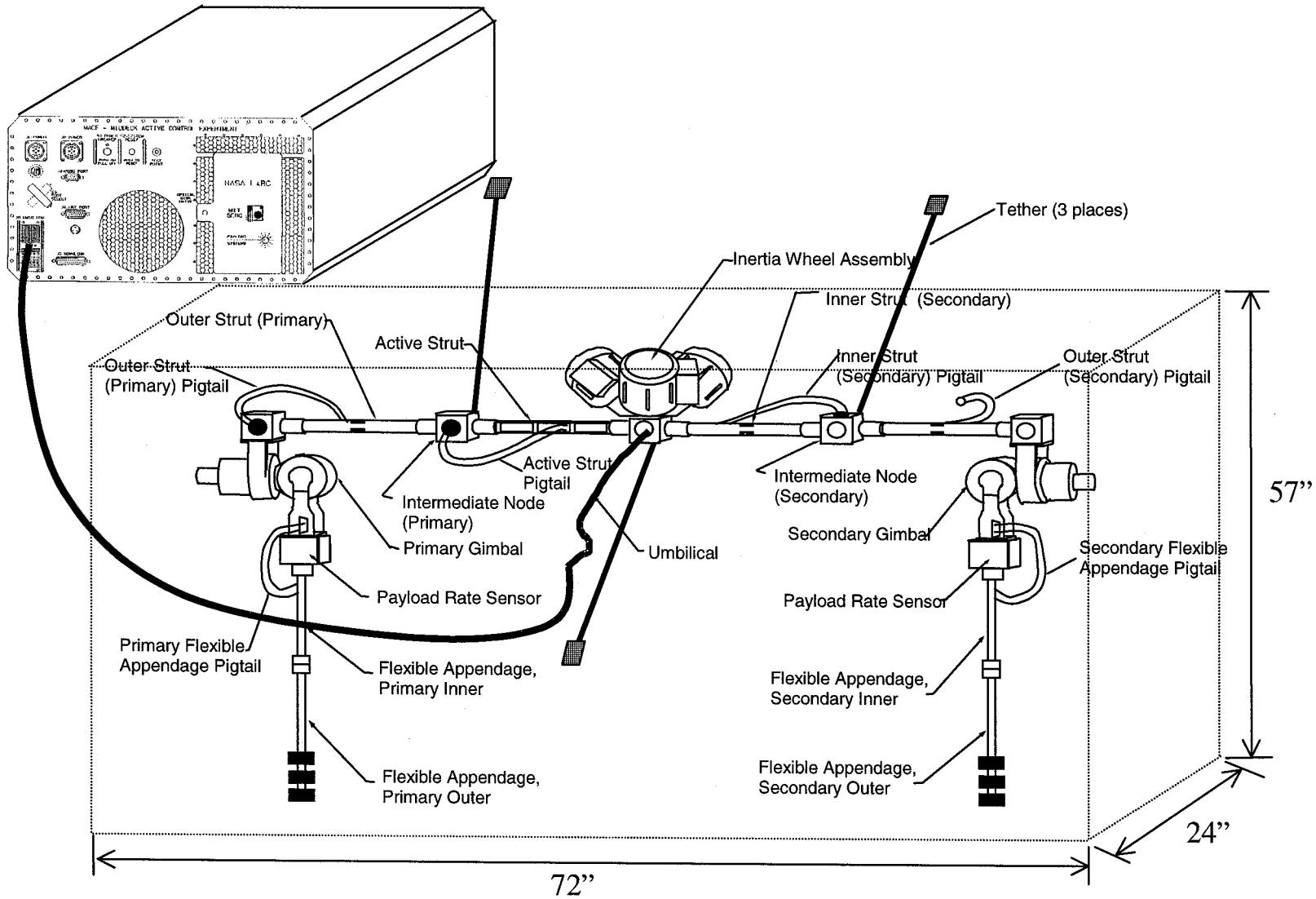

FIGURE 3.1.2–1 MACE II ON–ORBIT CONFIGURATION (1 OF 2)

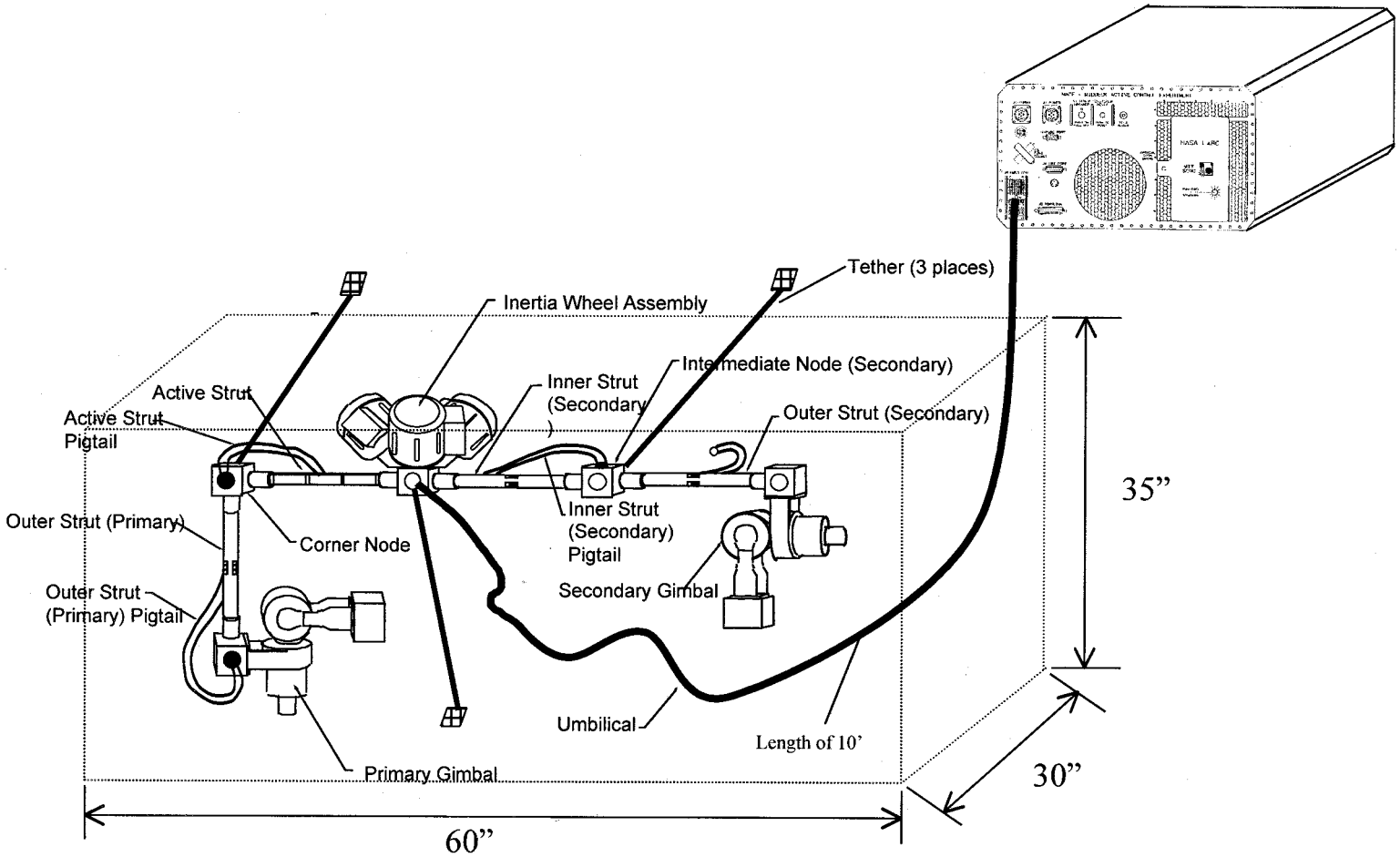

FIGURE 3.1.2–1 MACE II ON–ORBIT CONFIGURATION (2 OF 2)

3.1.3 EQUIPMENT MOUNTING

The MACE II payload to ISS on–orbit attachment interface shall be at the Seat Track Equipment Anchor (STEA). The STEA interface is shown in SSP 30257:004, Figure B–15. Mounting during operation will be as described in 3.1.2.

3.1.4 UTILITY OUTLET PANEL (UOP) INTERFACE – NODE 1

The physical interface of the MACE II payload to ISS system services is at the Utility Outlet Panel (UOP). The UOP connector layout is shown in Figure 3.1.4–1. The UOP connectors are defined in Table 3.1.4–1.

TABLE 3.1.4–1 UOP CONNECTOR PART NUMBERS

ISS Resource	UOP Connector Designation	ISS Part Number	MACE II Part Number
UOP Power/1553	J3	NATC00T15N97SN	NATC06G15N97PN
UOP Power/1553	J4	NATC00T15N97SN	N/A

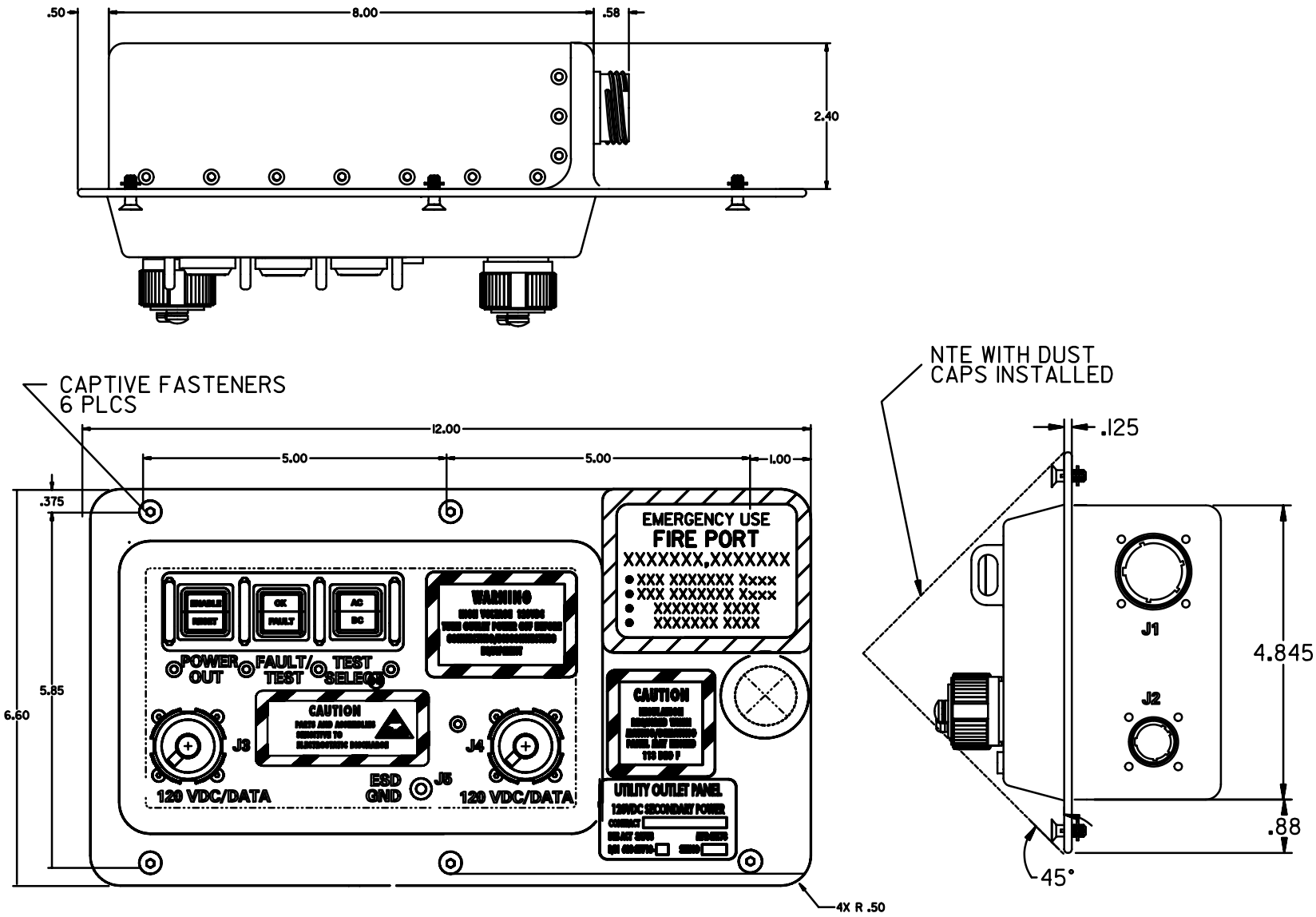

FIGURE 3.1.4–1 UOP CONNECTOR LAYOUT

3.2 ELECTRICAL POWER INTERFACE

3.2.1 UTILITY OUTLET PANEL – NODE 1

The UOP locations within Node 1 are shown in Figure 3.2.1–1. The Node 1 UOPs provide power and core 1553 Bus capabilities.

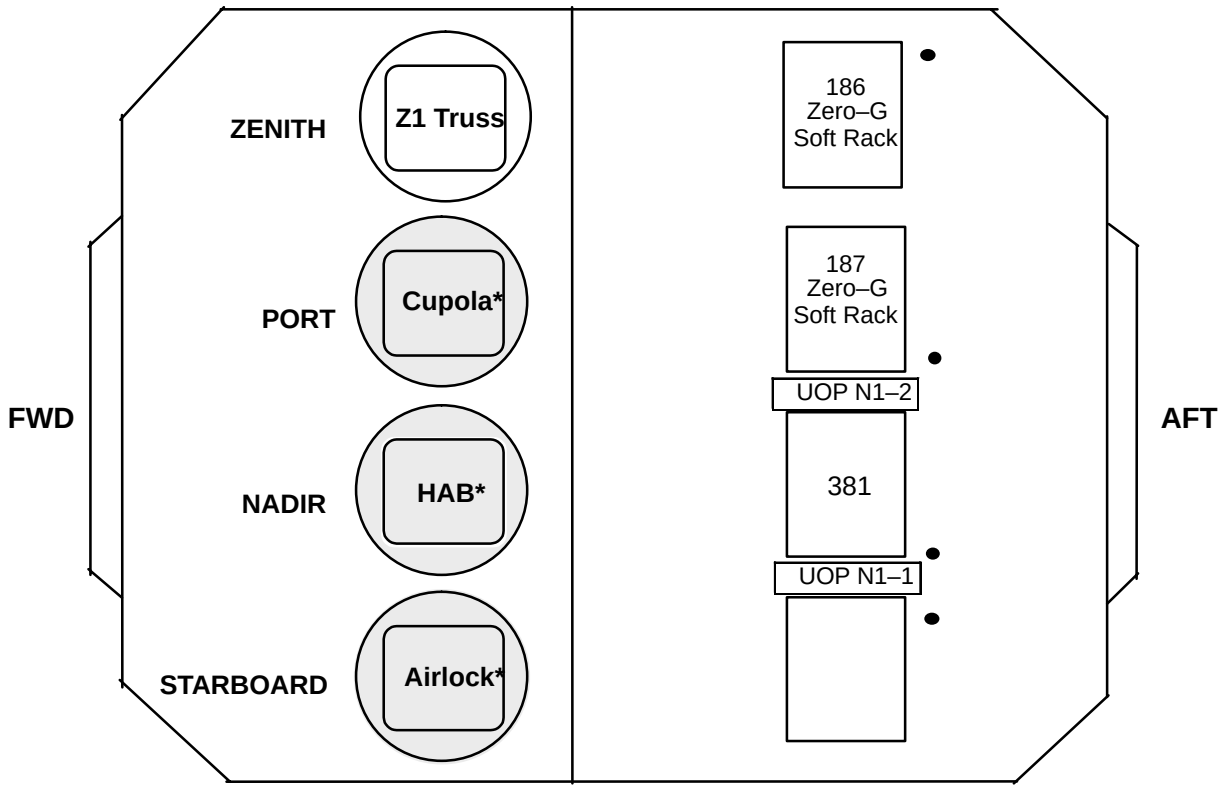

FIGURE 3.2.1–1 UOP LOCATION

3.2.1.1 UTILITY OUTLET PANEL CONNECTOR PIN ASSIGNMENTS

The part numbers for Utility Outlet Panel (UOP) electrical power and data connectors, J3 and J4, are defined in Table 3.1.4–1. The pin assignments for the UOP, module connector numbers NATC00T15N97SN is defined in Figure 3.2.1.1–1.

UOP

ISS NATC00T15N97SN	J3	J1	MACE II POWER CONVERTERS NATC06G15N97PN
1553 STUB A HI	A	A	NOT USED
1553 STUB A LO	B	B	NOT USED
NOT CONNECTED	C	C	NOT USED
1553 STUB–A SHIELD	D	D	NOT USED
NOT CONNECTED	E	E	NOT USED
NOT CONNECTED	F	F	NOT USED
CHASSIS GROUND	G	G	CHASSIS GROUND
1553 STUB B HI	H	H	NOT USED
1553 STUB B LO	J	J	NOT USED
1553 STUB–B SHIELD	K	K	NOT USED
SECONDARY POWER RETURN	L	L	120 VDC RETURN
SECONDARY POWER SUPPLY	M	M	120 VDC SUPPLY

Note: User has the option of connecting data cable shields directly to connector backshell or mating shields to shield pins D and K respectively.

FIGURE 3.2.1.1–1 UOP ELECTRICAL POWER/1553 CONNECTOR PIN ASSIGNMENTS

3.2.2 ELECTRICAL CHARACTERISTICS

The MACE II payload will receive power, for outputs up to 5A, that complies with SSP 30482, Volume 1, for Interface C. Maximum steady–state current from Node 1 UOPs may not conform to SSP 30482, Volume 1, Power Quality Requirements for Interface C when the UOP output exceeds 5A (Reference S684–10102H, Paragraph 3.2.1.33.4).

A schematic depicting the MACE II Power Converter Grounding Scheme is provided in Figure 3.2.2–1. The MACE II maximum current and voltage levels are listed in Table 3.2.2–1.

The surge current for the MACE II payload is illustrated in Figures 3.2.2–2 and 3.2.2–3. Figure 3.2.2–2 depicts the surge current with power applied using the UOP RPC soft start/stop function. Figure 3.2.2–3 depicts the surge current with power applied using the UOP power switch (without soft start/stop function). These two cases each represent a requirement exceedance as documented in Section 5.

TABLE 3.2.2–1 ELECTRICAL POWER CHARACTERISTICS

120 Volts Input	Input Current (A) (peak)	Input Power (W) (peak)
MACE II	2.94 (5.16)	353 (619)

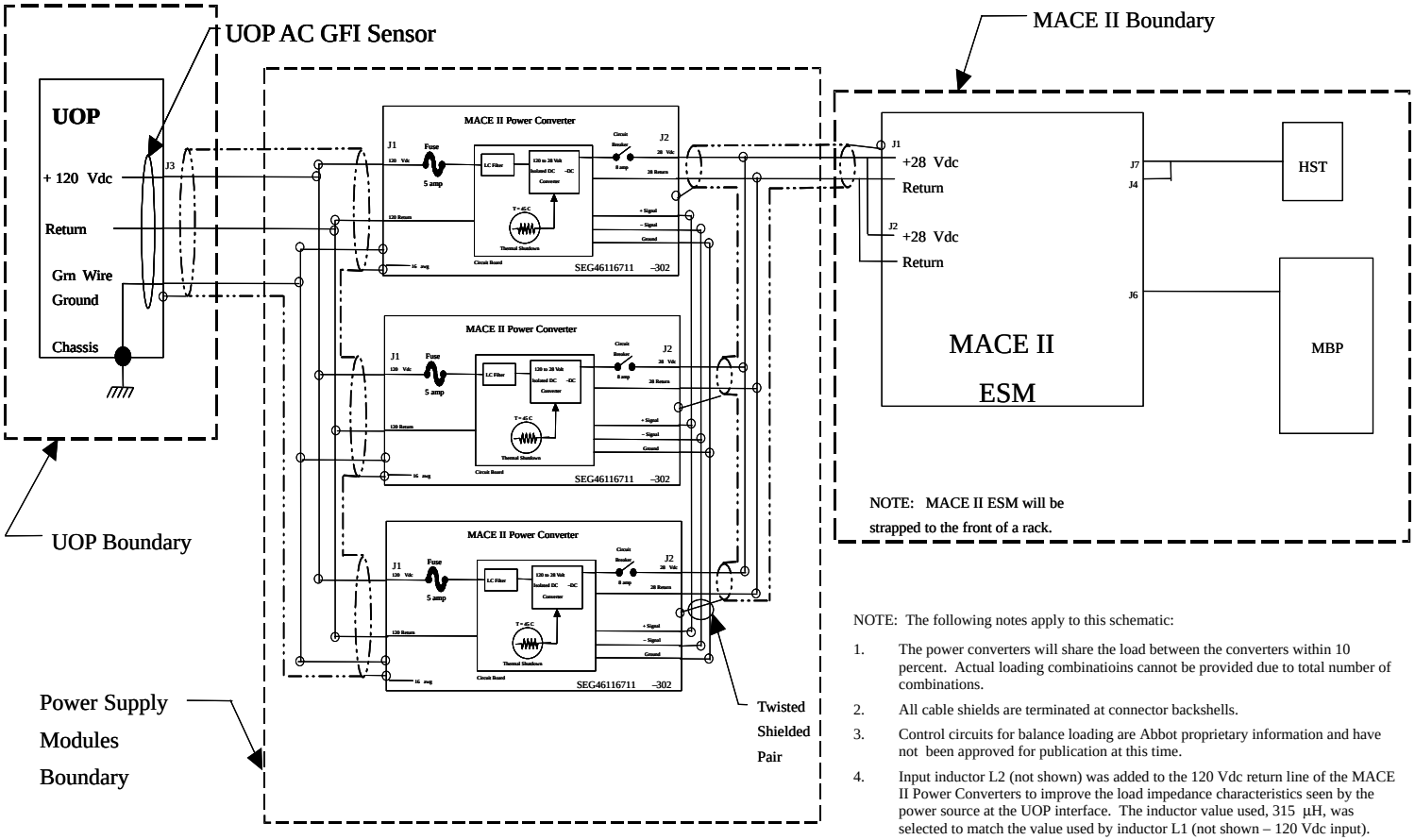

NOTE: The following notes apply to this schematic:

1. The power converters will share the load between the converters within 10 percent. Actual loading combinatioins cannot be provided due to total number of combinations.
2. All cable shields are terminated at connector backshells.
3. Control circuits for balance loading are Abbot proprietary information and have not been approved for publication at this time.
4. Input inductor L2 (not shown) was added to the 120 Vdc return line of the MACE II Power Converters to improve the load impedance characteristics seen by the power source at the UOP interface. The inductor value used, 315 µH, was selected to match the value used by inductor L1 (not shown – 120 Vdc input).

FIGURE 3.2.2–1 MACE II ELECTRICAL SCHEMATIC

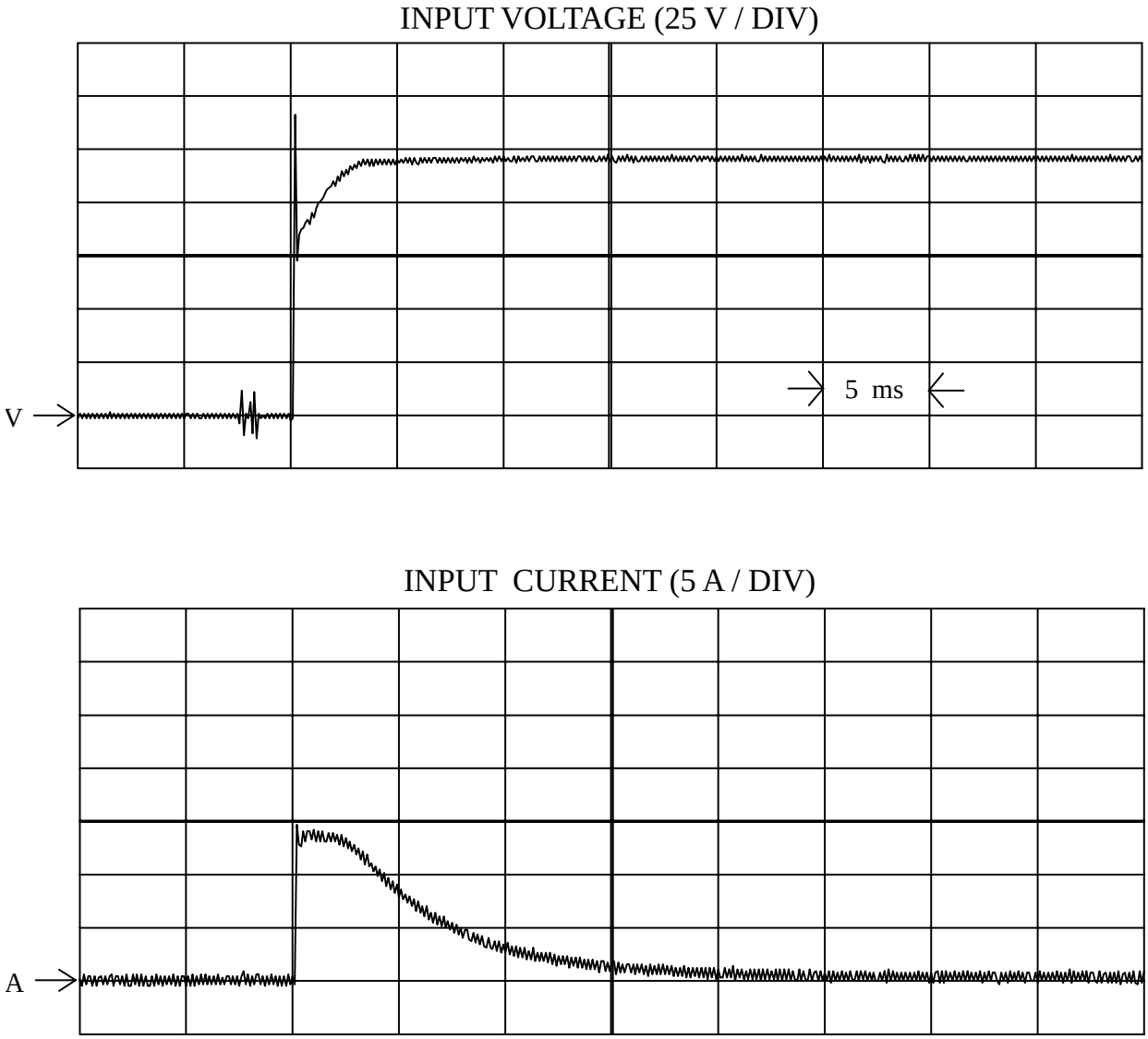

FIGURE 3.2.2–2 MACE II SURGE CURRENT WITH RPC CURRENT LIMITING

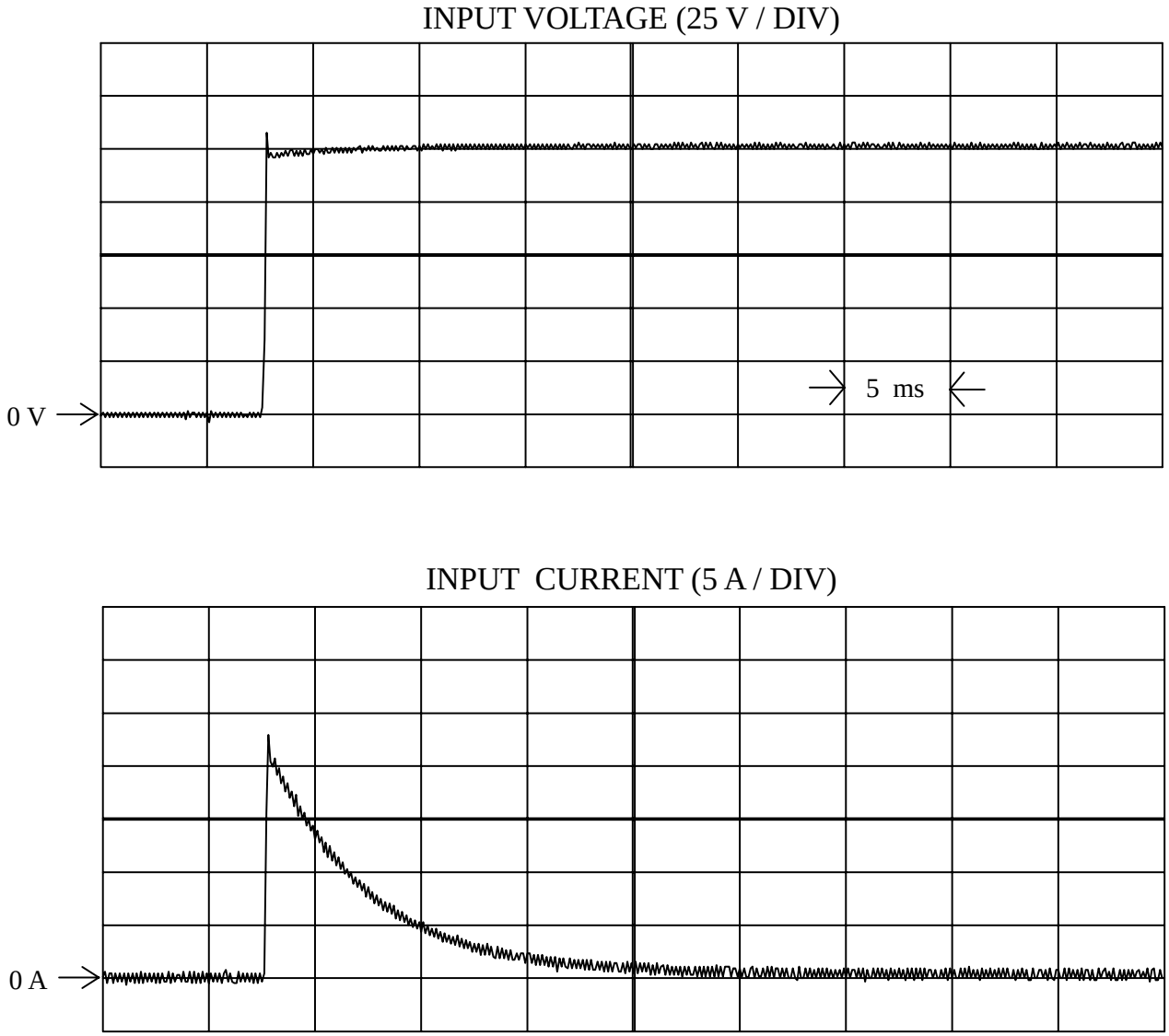

FIGURE 3.2.2–3 MACE II SURGE CURRENT WITHOUT RPC CURRENT LIMITING

3.2.3 CIRCUIT PROTECTION

The overload protection characteristics of the MACE II power distribution and circuit protection system are illustrated in Figure 3.2.3–1. The power converter input is protected by a 5A fuse. The fuse will not fail before current is limited by the upstream Remote Power Controller Module (RPCM); however, if the RPCM fails, the fuse will protect the wiring.

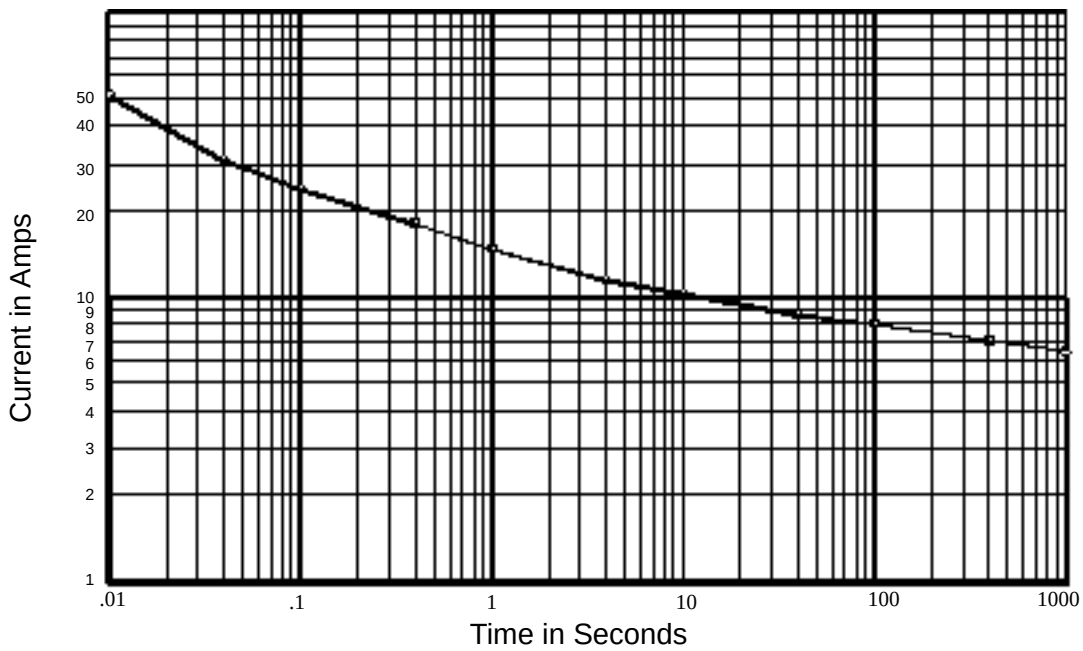

FIGURE 3.2.3–1 MACE II OVERLOAD PROTECTION CHARACTERISTICS

The ISS power source will provide protection to the Node 1 UOP interface for MACE II overload conditions by means of a Remote Power Controller (RPC). Figure 3.2.3–1 defines the trip regions for RPCs connected to the Node 1 UOP locations.

The overload limitation characteristics of the power feeders are defined in Figure 3.2.3–2. The curves define the region for RPCs connected to the MACE II payload in Node 1. For current limiting switches, the shaded regions in the figures show the current limit regions from the time the protection devices start to control the current within the specified range, to the maximum time where the protection device trips and interrupts the current flow. The current will be controlled to within the limiting level of 13.2 to 14.4 amperes within 1 millisecond. The RPC will trip if the current remains in the limiting region up to the decision time of 34.5 ± 3.5 milliseconds.

Table 3.2.3–1 defines the characteristics of the RPCs.

TABLE 3.2.3–1 DETAILED UPSTREAM PROTECTION CHARACTERISTICS

PWR INTERFACE	AUX PWR FEEDER			
	CURRENT LIMITATION LEVEL		TRIP DECISION TIME (1)	
	MIN.	MAX.	MIN.	MAX.
NODE 1	13.2 A	14.4 A	31 ms	38 ms

Note:
(1) Trip decision time within range of minimum and maximum limiting/trip threshold.

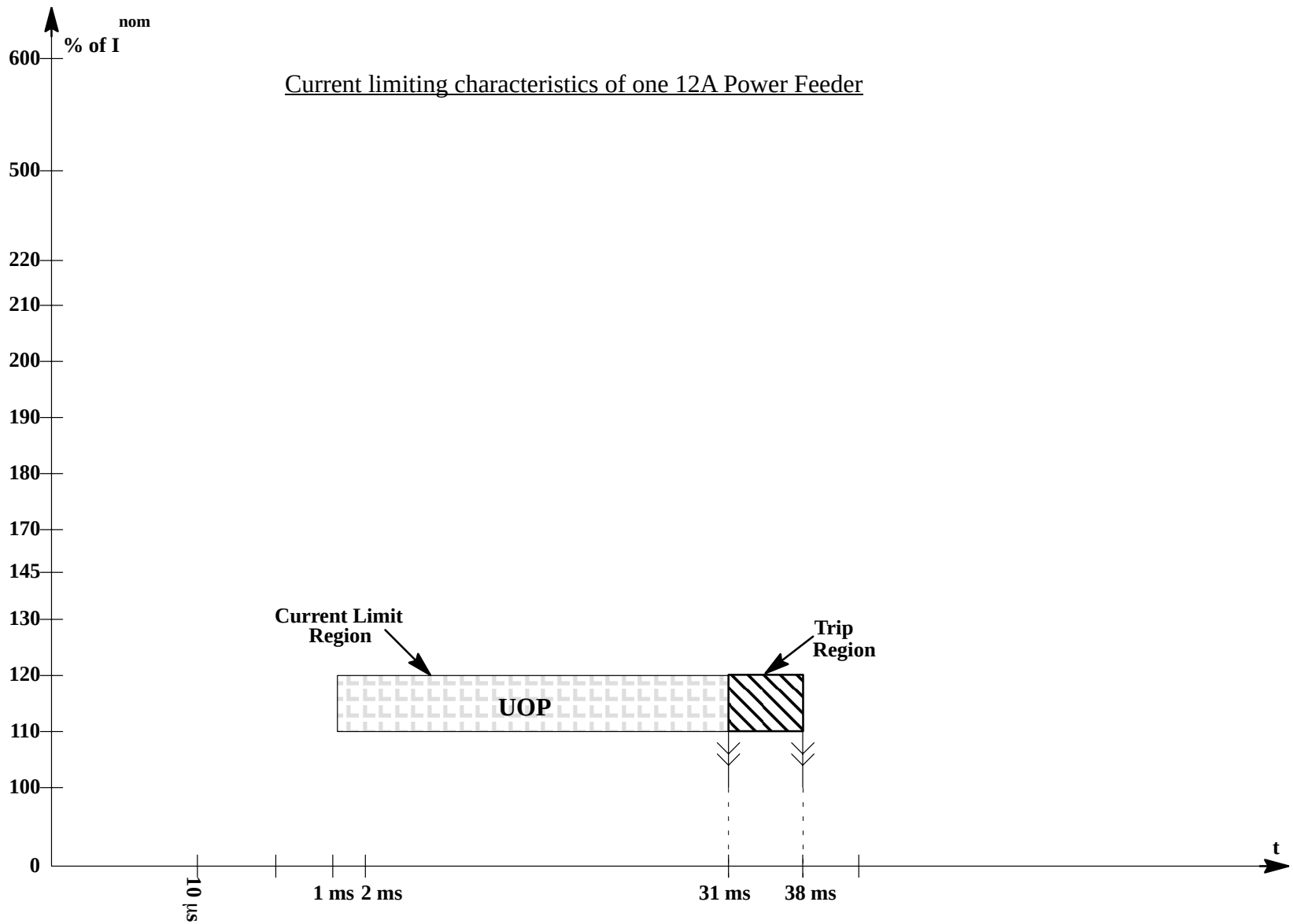

FIGURE 3.2.3–2 NODE 1 UOP OVERLOAD PROTECTION CHARACTERISTICS

3.2.4 IMPEDANCE CHARACTERISTICS

3.2.4.1 LOAD IMPEDANCE CHARACTERISTICS

The MACE II impedance magnitude and phase limits at the UOP interface are defined in Figure 3.2.4.1–1.

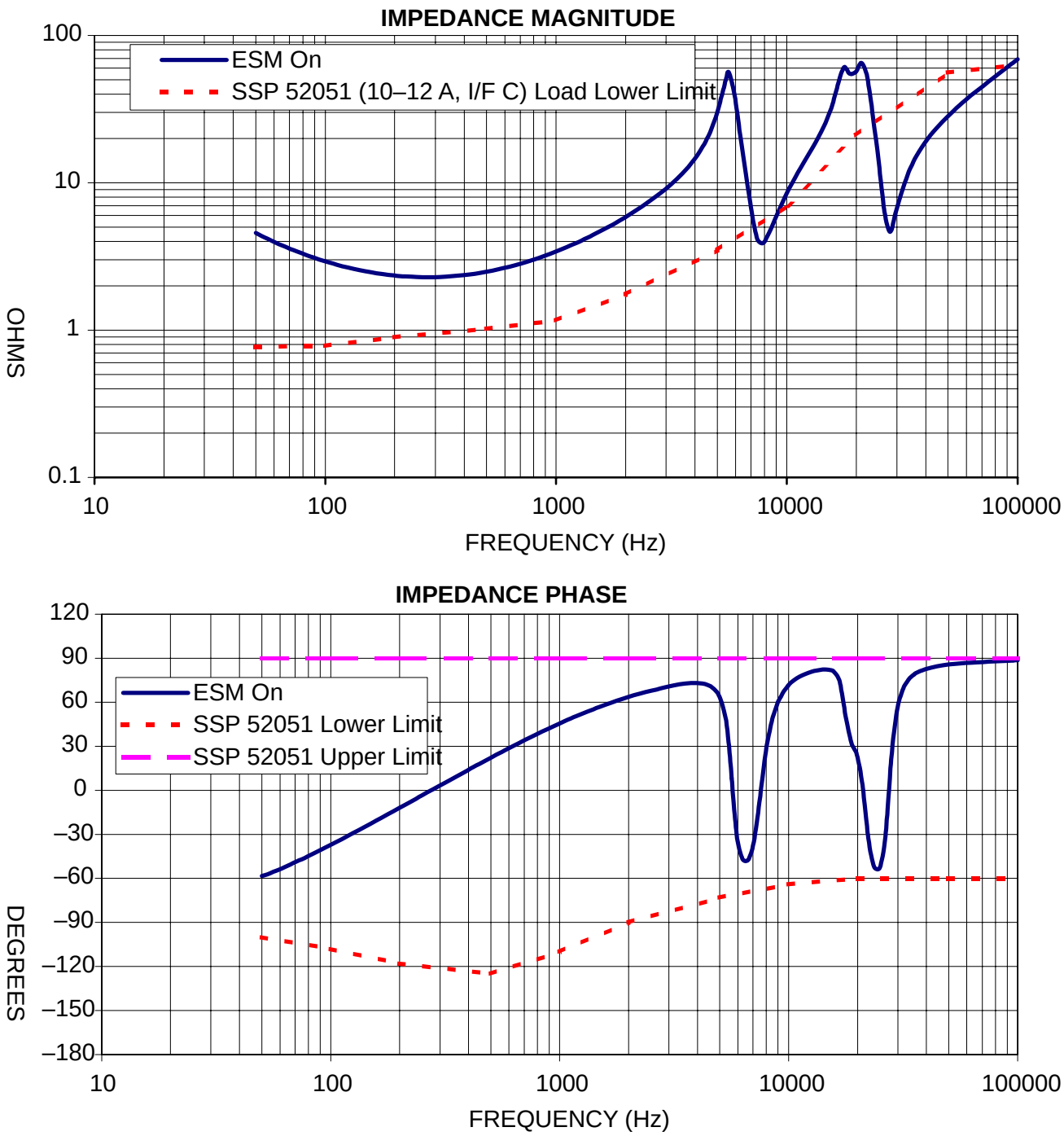

FIGURE 3.2.4.1–1 MACE II IMPEDANCE CHARACTERISTICS

3.2.4.2 SOURCE IMPEDANCE CHARACTERISTICS

The source impedance characteristics at the Node 1 UOP interface with MACE II are defined in Figure 3.2.4.2–1.

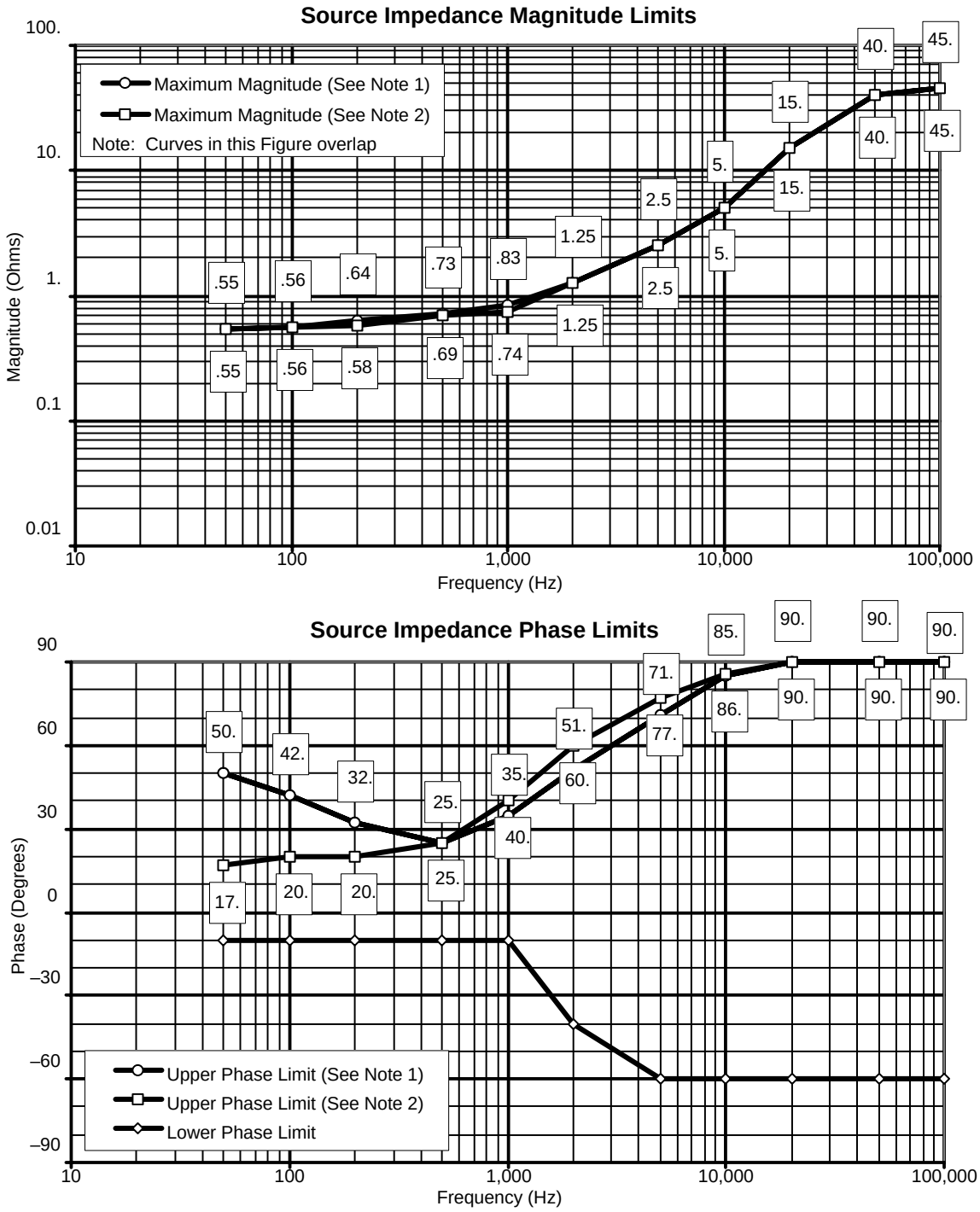

1. Limit when total load on the Secondary Power Source is less than 400 watts.
2. Limit when total load on the Secondary Power Source is at least 400 watts.

FIGURE 3.2.4.2–1 10–12 AMPERE INTERFACE C POWER SOURCE IMPEDANCE LIMITS

3.3 COMMAND AND DATA HANDLING (C&DH) INTERFACE

3.3.1 DATA FLOW DESCRIPTION

The MACE II ESM contains two PCMCIA hard drive slots. The crew procedures instruct the crew to install the ”FLIGHT PROTOCOLS” hard disk into the primary (PRI) slot and a blank hard disk into the secondary (SEC) slot. The computers internal to the ESM are directed to read from the “FLIGHT PROTOCOLS” disk and write to the blank disk. Once the data has been transferred to the blank disk, the crew then ejects that disk from the SEC slot and records the time and date, or Mission Elapsed Time (MET), on the disk. When there is an opportunity to transmit the data to the ground, the crew simply inserts the PCMCIA hard disk into a laptop computer that is linked to the Orbital Communications Adapter (OCA). The data is then transmitted to the ground via the Ku–Band communications system. To receive data transmitted from the ground, the crew would insert the ”FLIGHT PROTOCOLS” hard disk into the OCA laptop computer and the data files would be transmitted from the ground and stored on that disk. The crew would then take that disk and utilize it to operate any new or updated protocols in a manner similar to what is described above.

3.4 CABIN AIR HEAT LEAK

The MACE II payload will utilize the ISS cabin air for cooling. Thermal interface details are provided in Table 3.4–1.

TABLE 3.4–1 THERMAL INTERFACE

Unit	Sensible Heat Load (W)	Latent Heat Load (W)	Exhaust Air Velocity (ft^3/min.)	Exhaust Vent Area (in^2)
MACE II	353		67	15.9

3.5 ENVIRONMENTAL INTERFACES

3.5.1 NODE 1 ATMOSPHERIC ENVIRONMENT

3.5.1.1 PRESSURE

The MACE II payload will be exposed to pressures between 0.18 and 15.2 psi while in Node 1 (Ref. S684–10102H, Paragraph 3.3.12.1.9.2).

3.5.1.2 TEMPERATURE

The MACE II payload will be exposed to temperatures between 63 and 87 degrees F inclusive.

As a result of MACE operations, the cabin air temperature could exceed the PMA–1 to FGB interface limit of 85 degrees F documented in SSP 42121. In order to prevent the Node 1 cabin air temperatures from exceeding the PMA–1 to FGB cabin air temperature interface limit, MACE operations must be constrained per Table 3.5.1.2–1. The MACE run time limits were obtained from Boeing Analysis 5–5352–ECLS–EHT–00–014. Any increased run times over these limits will result in Node 1 cabin temperatures that will violate the SSP 42121 interface limits and must be negotiated with the Russian Party and will be documented as an exception to this ICD.

TABLE 3.5.1.2–1 OPERATIONAL CONSTRAINTS LIMITED BY THERMAL INTERFACE REQUIREMENTS

SM SETPOINT	MACE RUN TIME LIMIT	CABIN AIR COOL DOWN TIME
18° C	35 Minutes	2 Hours
22° C	14 Minutes	2 Hours

3.5.1.3 HUMIDITY

The MACE II payload will be exposed to 25 to 75% relative humidity.

3.5.2 ACOUSTICS

3.5.2.1 INTERMITTENT NOISE

A payload which operates for less than 8 hours in a 24 hour period and generates a SPL greater than or equal to 37 dBA measured at a distance of 0.6 meters from the noisiest part of the payload is classified as an Intermittent Noise Source. A payload classified as an Intermittent Noise Source must meet the total rack A–weighted SPL limits defined in Table 3.5.2.1–1.

The MACE II payload Intermittent Noise characteristics are defined in Table 3.5.2.1–1.

TABLE 3.5.2.1–1 INTERMITTENT NOISE LIMITS

Maximum Noise Duration Per 24 Hour Period	Total A–Weighted SPL (dBA) Limit
90 Minutes	65*

Note: *This represents an exception to SSP 57000, Paragraph 3.12.3.3.2. A summary of the exception is provided in Section 5.

(This Page Intentionally Left Blank)

4.0 APPLICABILITY MATRIX

4.1 PURPOSE

The purpose of this payload Unique Interface Control Document (ICD) is to define and control the design of interfaces between the International Space Station and the MACE II payload. The payload interfaces are defined by direct reference to the corresponding sections and subsections of the Pressurized Payload Interface Requirements Document (IRD), SSP 57000. The documented applicability matrix for the unique payload serves as the basis for developing the Unique Payload Verification Plan according to SSP 57010, the Generic Payload Verification Plan.

4.2 ORGANIZATION

The Unique Interface Control Document Applicability Matrix, Table 4.2–1, has the same numbers (IRD PARAGRAPH) and titles (IRD REQUIREMENT) for each section and subsection as the Pressurized Payload Interface Requirements Document, SSP 57000. Those fields in Table 4.2–1's "PAYLOAD APPLICABILITY" column, which are shaded are included for reference only and are not to be dispositioned in this ICD.

Each paragraph of the IRD shall be dispositioned in the "PAYLOAD APPLICABILITY" column with one of the following:

A	Applicable to this ICD, indicating that the referenced interface is utilized by the integrated rack facility or payload hardware item.
N/A	Not Applicable to this ICD, indicating that the referenced interface is not utilized by the integrated rack facility or payload hardware item.
E-##	Exception with the exception identifier number (##) as listed in Table 5–1.

TABLE 4.2–1 APPLICABILITY MATRIX

IRD PARAGRAPH	IRD REQUIREMENT	PAYLOAD APPLICABILITY
3.0	PAYLOAD INTERFACE REQUIREMENTS AND GUIDANCE	
3.1	STRUCTURAL/MECHANICAL AND MICROGRAVITY AND STOWAGE INTERFACE REQUIREMENTS	
3.1.1	STRUCTURAL/MECHANICAL	
3.1.1.1.A	GSE INTERFACES	
3.1.1.1.B	GSE INTERFACES	
3.1.1.1.C	GSE INTERFACES	
3.1.1.1.D	GSE INTERFACES	
3.1.1.2.A	MPLM INTERFACES	
3.1.1.2.B	MPLM INTERFACES	A
3.1.1.2.C	DELETED	
3.1.1.2.D	DELETED	
3.1.1.2.E	MPLM INTERFACES	
3.1.1.2.1	MPLM LATE/EARLY ACCESS REQUIREMENTS	N/A – MACE II does not have MPLM late/early access requirements
3.1.1.2.1.1.A	MPLM LATE ACCESS ENVELOPE (KSC)	N/A – MACE II does not have MPLM late/early access requirements
3.1.1.2.1.1.B	MPLM LATE ACCESS ENVELOPE (KSC)	N/A – MACE II does not have MPLM late/early access requirements
3.1.1.2.1.1.C	MPLM LATE ACCESS ENVELOPE (KSC)	N/A – MACE II does not have MPLM late/early access requirements
3.1.1.2.1.2.A	MPLM EARLY ACCESS ENVELOPES (KSC AND DFRC)	N/A – MACE II does not have MPLM late/early access requirements
3.1.1.2.1.2.B	MPLM EARLY ACCESS ENVELOPES (KSC AND DFRC)	N/A – MACE II does not have MPLM late/early access requirements
3.1.1.3.A	LOADS REQUIREMENTS	
3.1.1.3.B	LOADS REQUIREMENTS	A
3.1.1.3.C	LOADS REQUIREMENTS	

TABLE 4.2–1 APPLICABILITY MATRIX (CONTINUED)

IRD PARAGRAPH	IRD REQUIREMENT	PAYLOAD APPLICABILITY
3.1.1.3.D	LOADS REQUIREMENTS	A
3.1.1.3.E	LOADS REQUIREMENTS	
3.1.1.3.F	LOADS REQUIREMENTS	
3.1.1.4.A	RACK REQUIREMENTS	
3.1.1.4.B	RACK REQUIREMENTS	A
3.1.1.4.C	RACK REQUIREMENTS	
3.1.1.4.D	RACK REQUIREMENTS	
3.1.1.4.E	RACK REQUIREMENTS	
3.1.1.4.F	RACK REQUIREMENTS	
3.1.1.4.G	DELETED	
3.1.1.4.H	DELETED	
3.1.1.4.I	RACK REQUIREMENTS	
3.1.1.4.J	DELETED	
3.1.1.4.K	RACK REQUIREMENTS	A
3.1.1.4.L	RACK REQUIREMENTS	
3.1.1.4.M	RACK REQUIREMENTS	
3.1.1.4.1.A	LAB WINDOW RACK LOCATION REQUIREMENTS	
3.1.1.4.1.B	LAB WINDOW RACK LOCATION REQUIREMENTS	
3.1.1.4.1.C	LAB WINDOW RACK LOCATION REQUIREMENTS	
3.1.1.5.A	SAFETY CRITICAL STRUCTURES REQUIREMENTS	N/A – No safety critical structures
3.1.1.6	CONNECTOR AND UMBILICAL PHYSICAL MATE	
3.1.1.6.1	CONNECTOR PHYSICAL MATE	A
3.1.1.6.2	UMBILICAL PHYSICAL MATE	
3.1.1.7.A	ON–ORBIT PAYLOAD PROTRUSIONS	A
3.1.1.7.B	ON–ORBIT PAYLOAD PROTRUSIONS	A
3.1.1.7.1	ON–ORBIT PERMANENT PROTRUSIONS	
3.1.1.7.2.A	ON–ORBIT SEMI–PERMANENT PROTRUSIONS	
3.1.1.7.2.B	ON–ORBIT SEMI–PERMANENT PROTRUSIONS	
3.1.1.7.2.C	ON–ORBIT SEMI–PERMANENT PROTRUSIONS	
3.1.1.7.3.A	ON–ORBIT TEMPORARY PROTRUSIONS	N/A
3.1.1.7.3.B	ON–ORBIT TEMPORARY PROTRUSIONS	N/A
3.1.1.7.4	ON–ORBIT MOMENTARY PROTRUSIONS	N/A – No drawers, doors, covers
3.1.1.7.5.A	ON–ORBIT PROTRUSIONS FOR KEEP–ALIVE PAYLOADS	N/A – MACE II does not have keep–alive payloads requirements

TABLE 4.2–1 APPLICABILITY MATRIX (CONTINUED)

IRD PARAGRAPH	IRD REQUIREMENT	PAYLOAD APPLICABILITY
3.1.1.7.5.B	ON–ORBIT PROTRUSIONS FOR KEEP–ALIVE PAYLOADS	N/A – MACE II does not have keep–alive payloads requirements
3.1.2	MICROGRAVITY	
3.1.2.1.A	QUASI-STEADY REQUIREMENTS	N/A – Microgravity requirements do not apply until UF–3
3.1.2.1.B	QUASI-STEADY REQUIREMENTS	
3.1.2.2.A	VIBRATORY REQUIREMENTS	N/A – Microgravity requirements do not apply until UF–3
3.1.2.2.B	VIBRATORY REQUIREMENTS	
3.1.2.3.A	TRANSIENT REQUIREMENTS	N/A – Microgravity requirements do not apply until UF–3
3.1.2.3.B	TRANSIENT REQUIREMENTS	
3.1.2.4	MICROGRAVITY ENVIRONMENT	
3.1.2.5	ARIS INTERFACES	
3.1.3	STOWAGE	
3.2	ELECTRICAL INTERFACE REQUIREMENTS	
3.2.1	ELECTRICAL POWER CHARACTERISTICS	
3.2.1.1	STEADY–STATE VOLTAGE CHARACTERISTICS	
3.2.1.1.1	INTERFACE B	
3.2.1.1.2	INTERFACE C	A
3.2.1.2	RIPPLE VOLTAGE CHARACTERISTICS	
3.2.1.2.1	RIPPLE VOLTAGE AND NOISE	A
3.2.1.2.2	RIPPLE VOLTAGE SPECTRUM	A
3.2.1.3	TRANSIENT VOLTAGES	
3.2.1.3.1	INTERFACE B	
3.2.1.3.2	INTERFACE C	A
3.2.1.3.3	FAULT CLEARING AND PROTECTION	A
3.2.1.3.4.A	NON–NORMAL VOLTAGE RANGE	A
3.2.1.3.4.B	NON–NORMAL VOLTAGE RANGE	A
3.2.2	ELECTRICAL POWER INTERFACE	
3.2.2.1.A	UIP AND UOP CONNECTORS AND PIN ASSIGNMENTS	

TABLE 4.2–1 APPLICABILITY MATRIX (CONTINUED)

IRD PARAGRAPH	IRD REQUIREMENT	PAYLOAD APPLICABILITY
3.2.2.1.B	UIP AND UOP CONNECTORS AND PIN ASSIGNMENTS	
3.2.2.1.C	UIP AND UOP CONNECTORS AND PIN ASSIGNMENTS	
3.2.2.1.D	UIP AND UOP CONNECTORS AND PIN ASSIGNMENTS	
3.2.2.1.E	UIP AND UOP CONNECTORS AND PIN ASSIGNMENTS	A
3.2.2.1.F	UIP AND UOP CONNECTORS AND PIN ASSIGNMENTS	A
3.2.2.2.A	POWER BUS ISOLATION	
3.2.2.2.B	POWER BUS ISOLATION	
3.2.2.3	COMPATIBILITY WITH SOFT START/STOP RPC	A
3.2.2.4	SURGE CURRENT	E–01
3.2.2.5	REVERSE ENERGY/CURRENT	A
3.2.2.6	CIRCUIT PROTECTION DEVICES	
3.2.2.6.1	ISS EPS CIRCUIT PROTECTION CHARACTERISTICS	
3.2.2.6.1.1.A	REMOTE POWER CONTROLLERS (RPCs)	N/A
3.2.2.6.1.1.B	REMOTE POWER CONTROLLERS (RPCs)	N/A
3.2.2.6.1.1.C	REMOTE POWER CONTROLLERS (RPCs)	A
3.2.2.6.1.1.D	REMOTE POWER CONTROLLERS (RPCs)	A
3.2.2.6.1.1.E	REMOTE POWER CONTROLLERS (RPCs)	
3.2.2.6.2	EPCE RPC INTERFACE REQUIREMENTS	
3.2.2.6.2.1	RPC TRIP COORDINATION	
3.2.2.6.2.1.1	PAYLOAD TRIP RATINGS	
3.2.2.7	EPCE COMPLEX LOAD IMPEDANCES	
3.2.2.7.1.A	INTERFACE B	
3.2.2.7.1.B	INTERFACE B	
3.2.2.7.2	INTERFACE C	A
3.2.2.8	LARGE SIGNAL STABILITY	A
3.2.2.9	MAXIMUM RIPPLE VOLTAGE EMISSIONS	A
3.2.2.10.A	ELECTRICAL LOAD–STAND ALONE STABILITY	A
3.2.2.10.B	ELECTRICAL LOAD–STAND ALONE STABILITY	A
3.2.2.10.C	ELECTRICAL LOAD–STAND ALONE STABILITY	A
3.2.2.11	ELECTRICAL LOAD INDUCTANCE	N/A – Applies only to JEM
3.2.3	ELECTRICAL POWER CONSUMER CONSTRAINTS	
3.2.3.1.A	WIRE DERATING	A
3.2.3.1.B	WIRE DERATING	A
3.2.3.1.C	WIRE DERATING	N/A
3.2.3.2.A	EXCLUSIVE POWER FEEDS	
3.2.3.2.B	EXCLUSIVE POWER FEEDS	N/A – No cabling between Interfaces B and C

TABLE 4.2–1 APPLICABILITY MATRIX (CONTINUED)

IRD PARAGRAPH	IRD REQUIREMENT	PAYLOAD APPLICABILITY
3.2.3.3	LOSS OF POWER	A
3.2.4	ELECTROMAGNETIC COMPATIBILITY	A
3.2.4.1	ELECTRICAL GROUNDING	A
3.2.4.2	ELECTRICAL BONDING	A
3.2.4.3	CABLE/WIRE DESIGN AND CONTROL REQUIREMENTS	A
3.2.4.4	ELECTROMAGNETIC INTERFERENCE	A
3.2.4.5	ELECTROSTATIC DISCHARGE	A
3.2.4.6	ALTERNATING CURRENT (ac) MAGNETIC FIELDS	A
3.2.4.7	DIRECT CURRENT (dc) MAGNETIC FIELDS	A
3.2.4.8	CORONA	N/A – No Voltages > 190 VDC
3.2.4.9	LIGHTNING	N/A – Power supply electric umbilicals are not connected to the vehicle during launch and landing
3.2.4.10	EMI SUSCEPTIBILITY FOR SAFETY–CRITICAL CIRCUITS	N/A – There are no safety–critical circuits
3.2.5	SAFETY REQUIREMENTS	
3.2.5.1	PAYLOAD ELECTRICAL SAFETY	
3.2.5.1.1	MATING/DEMATING OF POWERED CONNECTORS	A
3.2.5.1.2	SAFETY–CRITICAL CIRCUITS REDUNDANCY	N/A – There are no safety–critical circuits
3.2.5.2	RACK MAINTENANCE SWITCH (RACK POWER SWITCH)	
3.2.5.3.A	POWER SWITCHES/CONTROLS	A
3.2.5.3.B	POWER SWITCHES/CONTROLS	A
3.2.5.3.C	POWER SWITCHES/CONTROLS	N/A – There is no standby or charging function
3.2.5.4.A	GROUND FAULT CIRCUIT INTERRUPTERS (GFCI)/PORTABLE EQUIPMENT dc SOURCING VOLTAGE	N/A – Power supply does not provide power above 32 VDC to any other portable equipment
3.2.5.4.B	GROUND FAULT CIRCUIT INTERRUPTERS (GFCI)/PORTABLE EQUIPMENT dc SOURCING VOLTAGE	N/A – No GFCI in power supply
3.2.5.4.C	GROUND FAULT CIRCUIT INTERRUPTERS (GFCI)/PORTABLE EQUIPMENT dc SOURCING VOLTAGE	N/A – No GFCI in power supply
3.2.5.4.D	GROUND FAULT CIRCUIT INTERRUPTERS (GFCI)/PORTABLE EQUIPMENT dc SOURCING VOLTAGE	N/A – No credible fault path

TABLE 4.2–1 APPLICABILITY MATRIX (CONTINUED)

IRD PARAGRAPH	IRD REQUIREMENT	PAYLOAD APPLICABILITY
3.2.5.4.E	GROUND FAULT CIRCUIT INTERRUPTERS (GFCI)/PORTABLE EQUIPMENT dc SOURCING VOLTAGE	N/A – No GFCI in power supply
3.2.5.4.F	GROUND FAULT CIRCUIT INTERRUPTERS (GFCI)/PORTABLE EQUIPMENT dc SOURCING VOLTAGE	N/A – No GFCI in power supply
3.2.5.4.G	GROUND FAULT CIRCUIT INTERRUPTERS (GFCI)/PORTABLE EQUIPMENT dc SOURCING VOLTAGE	N/A – No GFCI in power supply
3.2.5.5.A	PORTABLE EQUIPMENT/POWER CORDS	A
3.2.5.5.B	PORTABLE EQUIPMENT/POWER CORDS	A
3.2.6	MPLM	
3.2.6.1.A	MPLM ELECTRICAL POWER CHARACTERISTICS	
3.2.6.1.B	MPLM ELECTRICAL POWER CHARACTERISTICS	
3.2.6.1.C	MPLM ELECTRICAL POWER CHARACTERISTICS	
3.2.6.1.D	MPLM ELECTRICAL POWER CHARACTERISTICS	
3.2.6.1.E	MPLM ELECTRICAL POWER CHARACTERISTICS	
3.2.6.1.F	MPLM ELECTRICAL POWER CHARACTERISTICS	
3.2.6.1.G	MPLM ELECTRICAL POWER CHARACTERISTICS	
3.2.6.2.A	MPLM ELECTRICAL POWER INTERFACE	
3.2.6.2.B	MPLM ELECTRICAL POWER INTERFACE	
3.2.6.2.C	MPLM ELECTRICAL POWER INTERFACE	
3.2.6.2.D	MPLM ELECTRICAL POWER INTERFACE	
3.2.6.2.E	MPLM ELECTRICAL POWER INTERFACE	
3.2.6.2.F	MPLM ELECTRICAL POWER INTERFACE	
3.2.6.2.1.A	MPLM UIP CONNECTORS AND PIN ASSIGNMENTS	
3.2.6.2.1.B	MPLM UIP CONNECTORS AND PIN ASSIGNMENTS	
3.2.6.2.1.C	MPLM UIP CONNECTORS AND PIN ASSIGNMENTS	
3.2.6.2.2	COMPATIBILITY WITH RPC SOFT START/STOP IN MPLM	
3.2.6.2.3.A	MPLM SURGE CURRENT	
3.2.6.2.3.B	MPLM SURGE CURRENT	
3.2.6.2.3.C	MPLM SURGE CURRENT	
3.2.6.2.3.D	MPLM SURGE CURRENT	
3.2.6.2.4	MPLM REVERSE ENERGY/CURRENT	
3.2.6.2.5	MPLM PAYLOAD TRIP RATINGS	
3.2.6.3.A	MPLM ELECTRICAL POWER CONSUMER CONSTRAINTS	
3.2.6.3.B	MPLM ELECTRICAL POWER CONSUMER CONSTRAINTS	
3.2.6.3.C	MPLM ELECTRICAL POWER CONSUMER CONSTRAINTS	
3.2.6.3.D	MPLM ELECTRICAL POWER CONSUMER CONSTRAINTS	
3.2.6.4.A	MPLM ELECTROMAGNETIC COMPATIBILITY	
3.2.6.4.B	MPLM ELECTROMAGNETIC COMPATIBILITY	
3.2.6.4.C	MPLM ELECTROMAGNETIC COMPATIBILITY	

TABLE 4.2–1 APPLICABILITY MATRIX (CONTINUED)

IRD PARAGRAPH	IRD REQUIREMENT	PAYLOAD APPLICABILITY
3.2.6.4.D	MPLM ELECTROMAGNETIC COMPATIBILITY	
3.2.6.4.E	MPLM ELECTROMAGNETIC COMPATIBILITY	
3.2.6.4.F	MPLM ELECTROMAGNETIC COMPATIBILITY	
3.2.6.4.G	MPLM ELECTROMAGNETIC COMPATIBILITY	
3.2.6.4.H	MPLM ELECTROMAGNETIC COMPATIBILITY	
3.2.6.4.I	MPLM ELECTROMAGNETIC COMPATIBILITY	
3.2.6.4.J	MPLM ELECTROMAGNETIC COMPATIBILITY	
3.2.6.4.1	MPLM BONDING	
3.2.6.5.A	MPLM SAFETY REQUIREMENTS	
3.2.6.5.B	MPLM SAFETY REQUIREMENTS	
3.2.6.5.C	MPLM SAFETY REQUIREMENTS	
3.2.6.5.D	MPLM SAFETY REQUIREMENTS	
3.2.6.5.E	MPLM SAFETY REQUIREMENTS	
3.2.6.5.F	MPLM SAFETY REQUIREMENTS	
3.3	COMMAND AND DATA HANDLING INTERFACE REQUIREMENTS	
3.3.1	GENERAL REQUIREMENTS	
3.3.2	WORD/BYTE NOTATIONS, TYPES AND DATA TRANSMISSIONS	
3.3.2.1	WORD/BYTE NOTATIONS	N/A – No ISS data interface
3.3.2.2	DATA TYPES	N/A – No ISS data interface
3.3.2.3A	DATA TRANSMISSIONS	N/A – No ISS data interface
3.3.2.3B	DATA TRANSMISSIONS	N/A – No ISS data interface
3.3.2.3C	DATA TRANSMISSIONS	N/A – No ISS data interface
3.3.3	DELETED	
3.3.4	CONSULTATIVE COMMITTEE FOR SPACE DATA SYSTEMS	
3.3.4.1.A	CCSDS DATA	N/A – No ISS data interface
3.3.4.1.B	CCSDS DATA	N/A – No ISS data interface
3.3.4.1.C	CCSDS DATA	N/A – No ISS data interface
3.3.4.1.1	CCSDS DATA PACKETS	N/A – No ISS data interface
3.3.4.1.1.1	CCSDS PRIMARY HEADER	N/A – No ISS data interface
3.3.4.1.1.2.A	CCSDS SECONDARY HEADER	N/A – No ISS data interface

TABLE 4.2–1 APPLICABILITY MATRIX (CONTINUED)

IRD PARAGRAPH	IRD REQUIREMENT	PAYLOAD APPLICABILITY
3.3.4.1.1.2.B	CCSDS SECONDARY HEADER	N/A – No ISS data interface
3.3.4.1.2	CCSDS DATA FIELD	N/A – No ISS data interface
3.3.4.1.3	CCSDS DATA BITSTREAM	N/A – No ISS data interface
3.3.4.1.4	CCSDS APPLICATION PROCESS IDENTIFICATION FIELD	
3.3.4.2	CCSDS TIME CODES	
3.3.4.2.1	CCSDS UNSEGMENTED TIME	N/A – No ISS data interface
3.3.4.2.2	CCSDS SEGMENTED TIME	N/A – No ISS data interface
3.3.5	MIL–STD–1553B LOW RATE DATA LINK (LRDL)	N/A – No ISS data interface
3.3.5.1	MIL–STD–1553B PROTOCOL	
3.3.5.1.1	STANDARD MESSAGES	N/A – No ISS data interface
3.3.5.1.2	COMMANDING	N/A – No ISS data interface
3.3.5.1.3	HEALTH AND STATUS DATA	N/A – No ISS data interface
3.3.5.1.4.A	SAFETY DATA	N/A – No ISS data interface
3.3.5.1.4.B	SAFETY DATA	N/A – No ISS data interface
3.3.5.1.4.1	CAUTION AND WARNING	
3.3.5.1.4.1.1	CLASS 1 – EMERGENCY	
3.3.5.1.4.1.2	CLASS 2 – WARNING	N/A – No ISS data interface
3.3.5.1.4.1.3	CLASS 3 – CAUTION	N/A – No ISS data interface
3.3.5.1.4.1.4	CLASS 4 – ADVISORY	N/A – No ISS data interface
3.3.5.1.5	SERVICE REQUESTS	N/A – No ISS data interface
3.3.5.1.6	ANCILLARY DATA	
3.3.5.1.7	FILE TRANSFER	N/A – No ISS data interface
3.3.5.1.8	LOW RATE TELEMETRY	N/A – No ISS data interface
3.3.5.1.9	DEFINED MODE CODES	
3.3.5.1.10	IMPLEMENTED MODE CODES	N/A – No ISS data interface
3.3.5.1.11	UNIMPLEMENTED/UNDEFINED MODE CODES	N/A – No ISS data interface

TABLE 4.2–1 APPLICABILITY MATRIX (CONTINUED)

IRD PARAGRAPH	IRD REQUIREMENT	PAYLOAD APPLICABILITY
3.3.5.1.12	ILLEGAL COMMANDS	N/A – No ISS data interface
3.3.5.2	MIL–STD–1553B LOW RATE DATA LINK (LRDL) INTERFACE CHARACTERISTICS	
3.3.5.2.1	LRDL REMOTE TERMINAL ASSIGNMENT	
3.3.5.2.1.1	LRDL CONNECTOR/PIN ASSIGNMENTS	
3.3.5.2.1.2.A	MIL-STD-1553B BUS A AND B CONNECTOR/PIN ASSIGNMENT	
3.3.5.2.1.2.B	MIL-STD-1553B BUS A AND B CONNECTOR/PIN ASSIGNMENT	
3.3.5.2.1.2.C	MIL-STD-1553B BUS A AND B CONNECTOR/PIN ASSIGNMENT	
3.3.5.2.1.3	DELETED	
3.3.5.2.1.4.A	REMOTE TERMINAL HARDWIRED ADDRESS CODING	
3.3.5.2.1.4.B	REMOTE TERMINAL HARDWIRED ADDRESS CODING	
3.3.5.2.1.4.C	REMOTE TERMINAL HARDWIRED ADDRESS CODING	
3.3.5.2.1.4.D	REMOTE TERMINAL HARDWIRED ADDRESS CODING	
3.3.5.2.1.4.E	REMOTE TERMINAL HARDWIRED ADDRESS CODING	
3.3.5.2.2	LRDL SIGNAL CHARACTERISTICS	N/A – No ISS data interface
3.3.5.2.3	LRDL CABLING	N/A – No ISS data interface
3.3.5.2.4	MULTI–BUS ISOLATION	N/A – No ISS data interface
3.3.6	MEDIUM RATE DATA LINK (MRDL)	
3.3.6.1	MRDL PROTOCOL	N/A – No ISS data interface
3.3.6.1.1	INTEGRATED RACK PROTOCOLS ON THE MRDL	N/A – No ISS data interface
3.3.6.1.2.A	MRDL ADDRESS	N/A – No ISS data interface
3.3.6.1.2.B	MRDL ADDRESS	N/A – No ISS data interface
3.3.6.1.2.C	MRDL ADDRESS	N/A – No ISS data interface
3.3.6.1.3.A	ISPR MRDL CONNECTIVITY	N/A – No ISS data interface
3.3.6.1.3.B	ISPR MRDL CONNECTIVITY	N/A – No ISS data interface
3.3.6.1.3.C	ISPR MRDL CONNECTIVITY	N/A – No ISS data interface
3.3.6.1.4.A	MRDL CONNECTOR/PIN ASSIGNMENTS AND WIRE REQUIREMENTS	
3.3.6.1.4.B	MRDL CONNECTOR/PIN ASSIGNMENTS AND WIRE REQUIREMENTS	
3.3.6.1.4.C	MRDL CONNECTOR/PIN ASSIGNMENTS AND WIRE REQUIREMENTS	

TABLE 4.2–1 APPLICABILITY MATRIX (CONTINUED)

IRD PARAGRAPH	IRD REQUIREMENT	PAYLOAD APPLICABILITY
3.3.6.1.4.D	MRDL CONNECTOR/PIN ASSIGNMENTS AND WIRE REQUIREMENTS	N/A – No ISS data interface
3.3.6.1.5	MRDL SIGNAL CHARACTERISTICS	N/A – No ISS data interface
3.3.6.1.6	MRDL CABLE CHARACTERISTICS	
3.3.6.1.6.1	INSERTION LOSS	
3.3.6.1.6.2	DIFFERENTIAL CHARACTERISTIC IMPEDANCE	N/A – No ISS data interface
3.3.6.1.6.3	MEDIUM TIMING JITTER	
3.3.7	HIGH RATE DATA LINK (HRDL)	
3.3.7.1	PAYLOAD TO HIGH RATE FRAME MULTIPLEXER (HRFM) PROTOCOLS	N/A – No ISS data interface
3.3.7.2	HRDL INTERFACE CHARACTERISTICS	
3.3.7.2.1	PHYSICAL SIGNALING	
3.3.7.2.1.1.A	PHYSICAL SIGNALING DATA RATES	N/A – No ISS data interface
3.3.7.2.1.1.B	PHYSICAL SIGNALING DATA RATES	N/A – No ISS data interface
3.3.7.2.1.1.C	PHYSICAL SIGNALING DATA RATES	N/A – No ISS data interface
3.3.7.2.2	ENCODING	N/A – No ISS data interface
3.3.7.3	INTEGRATED RACK HRDL OPTICAL POWER	
3.3.7.3.1	INTEGRATED RACK HRDL TRANSMITTED OPTICAL POWER	N/A – No ISS data interface
3.3.7.3.2	INTEGRATED RACK HRDL RECEIVED OPTICAL POWER	N/A – No ISS data interface
3.3.7.4	HRDL FIBER OPTIC CABLE	N/A – No ISS data interface
3.3.7.5	HRDL FIBER OPTIC CABLE BEND RADIUS	N/A – No ISS data interface
3.3.7.6.A	HRDL CONNECTORS AND FIBER	
3.3.7.6.B	HRDL CONNECTORS AND FIBER	N/A – No ISS data interface
3.3.7.6.C	HRDL CONNECTORS AND FIBER	N/A – No ISS data interface
3.3.7.6.D	HRDL CONNECTORS AND FIBER	N/A – No ISS data interface
3.3.8	PERSONAL COMPUTERS	
3.3.8.1.A	PAYLOAD LAPTOP	N/A – No laptop use
3.3.8.1.B	PAYLOAD LAPTOP	N/A – No laptop use

TABLE 4.2–1 APPLICABILITY MATRIX (CONTINUED)

IRD PARAGRAPH	IRD REQUIREMENT	PAYLOAD APPLICABILITY
3.3.8.1.C	PAYLOAD LAPTOP	N/A – No laptop use
3.3.8.1.D	PAYLOAD LAPTOP	N/A – No laptop use
3.3.8.1.E	PAYLOAD LAPTOP	N/A – No laptop use
3.3.8.1.F	PAYLOAD LAPTOP	N/A – No laptop use
3.3.8.1.G	PAYLOAD LAPTOP	N/A – No laptop use
3.3.8.1.H	PAYLOAD LAPTOP	N/A – No laptop use
3.3.8.2.A	PCS	N/A – No PCS use
3.3.8.2.B	PCS	N/A – No PCS use
3.3.8.2.C	PCS	N/A – No PCS use
3.3.8.2.1.A	PCS TO UOP INTERFACE	
3.3.8.2.1.B	PCS TO UOP INTERFACE	
3.3.8.2.2.A	760XD LAPTOP TO RACK INTERFACE	N/A – No PCS use
3.3.8.2.2.B	760XD LAPTOP TO RACK INTERFACE	N/A – No PCS use
3.3.8.2.2.C	760XD LAPTOP TO RACK INTERFACE	N/A – No PCS use
3.3.8.2.2.D	760XD LAPTOP TO RACK INTERFACE	N/A – No PCS use
3.3.8.3.A	SSC	N/A – No SSC use
3.3.8.3.B	SSC	N/A – No SSC use
3.3.9	UOP	
3.3.10	MAINTENANCE SWITCH, SMOKE DETECTOR, SMOKE INDICATOR, AND INTEGRATED RACK FAN INTERFACES	
3.3.10.1.A	RACK MAINTENANCE SWITCH (RACK POWER SWITCH) INTERFACES	N/A – No rack maintenance switch
3.3.10.1.B	RACK MAINTENANCE SWITCH (RACK POWER SWITCH) INTERFACES	N/A – No rack maintenance switch
3.3.10.2	SMOKE DETECTOR INTERFACES	
3.3.10.2.1	ANALOG INTERFACE CHARACTERISTICS	N/A – No smoke detector
3.3.10.2.2	DISCRETE COMMAND BUILT-IN-TEST INTERFACE CHARACTERISTICS	N/A – No smoke detector
3.3.10.2.3	SMOKE INDICATOR ELECTRICAL INTERFACES	N/A – No smoke detector
3.3.10.2.4	FAN VENTILATION STATUS ELECTRICAL INTERFACES	N/A – No smoke detector
3.3.10.3.A	RACK MAINTENANCE SWITCH (RACK POWER SWITCH)/FIRE DETECTION SUPPORT INTERFACE CONNECTOR	

TABLE 4.2–1 APPLICABILITY MATRIX (CONTINUED)

IRD PARAGRAPH	IRD REQUIREMENT	PAYLOAD APPLICABILITY
3.3.10.3.B	RACK MAINTENANCE SWITCH (RACK POWER SWITCH)/FIRE DETECTION SUPPORT INTERFACE CONNECTOR	N/A – No rack maintenance switch
3.3.10.3.C	RACK MAINTENANCE SWITCH (RACK POWER SWITCH)/FIRE DETECTION SUPPORT INTERFACE CONNECTOR	N/A – No rack maintenance switch
3.4	PAYLOAD NTSC VIDEO AND AUDIO INTERFACE REQUIREMENTS	
3.4.1	PAYLOAD NTSC VIDEO INTERFACE REQUIREMENTS	
3.4.1.1.A	PAYLOAD NTSC OPTICAL VIDEO CHARACTERISTICS	N/A – No NTSC video interfaces
3.4.1.1.B	PAYLOAD NTSC OPTICAL VIDEO CHARACTERISTICS	N/A – No NTSC video interfaces
3.4.1.1.C	PAYLOAD NTSC OPTICAL VIDEO CHARACTERISTICS	N/A – No NTSC video interfaces
3.4.1.2	NTSC FIBER OPTIC VIDEO	
3.4.1.2.1.A	PULSE FREQUENCY MODULATION NTSC FIBER OPTIC VIDEO CHARACTERISTICS	N/A – No NTSC video interfaces
3.4.1.2.1.B	PULSE FREQUENCY MODULATION NTSC FIBER OPTIC VIDEO CHARACTERISTICS	N/A – No NTSC video interfaces
3.4.1.2.2	INTEGRATED RACK NTSC PFM VIDEO TRANSMITTED OPTICAL POWER	N/A – No NTSC video interfaces
3.4.1.2.3	INTEGRATED RACK NTSC PFM VIDEO AND SYNC SIGNAL RECEIVED OPTICAL POWER	N/A – No NTSC video interfaces
3.4.1.2.4	FIBER OPTIC CABLE CHARACTERISTICS	N/A – No NTSC video interfaces
3.4.1.2.5	PFM NTSC VIDEO FIBER OPTIC CABLE BEND RADIUS	N/A – No NTSC video interfaces
3.4.1.2.6	DELETED	
3.4.1.2.7.A	PFM NTSC OPTICAL CONNECTOR/PIN ASSIGNMENTS	
3.4.1.2.7.B	PFM NTSC OPTICAL CONNECTOR/PIN ASSIGNMENTS	N/A – No NTSC video interfaces
3.4.1.2.7.C	PFM NTSC OPTICAL CONNECTOR/PIN ASSIGNMENTS	N/A – No NTSC video interfaces
3.4.1.3	NTSC ELECTRICAL VIDEO INTERFACES	
3.4.1.3.1	CABLES	N/A – No NTSC video interfaces
3.4.1.3.2	SIGNAL STANDARD	N/A – No NTSC video interfaces
3.4.1.3.3	INTERFACE CIRCUIT	N/A – No NTSC video interfaces
3.4.1.3.4	CROSS TALK	N/A – No NTSC video interfaces
3.4.1.4.A	NTSC ELECTRICAL CONNECTOR/PIN ASSIGNMENTS	
3.4.1.4.B	NTSC ELECTRICAL CONNECTOR/PIN ASSIGNMENTS	N/A – No NTSC video interfaces

TABLE 4.2–1 APPLICABILITY MATRIX (CONTINUED)

IRD PARAGRAPH	IRD REQUIREMENT	PAYLOAD APPLICABILITY
3.4.1.4.C	NTSC ELECTRICAL CONNECTOR/PIN ASSIGNMENTS	N/A – No NTSC video interfaces
3.4.2	U.S. ELEMENT AUDIO INTERFACE REQUIREMENTS	
3.5	THERMAL CONTROL INTERFACE REQUIREMENTS	
3.5.1	INTERNAL THERMAL CONTROL SYSTEM (ITCS) INTERFACE REQUIREMENTS	
3.5.1.1.A	PHYSICAL INTERFACE	
3.5.1.1.B	PHYSICAL INTERFACE	
3.5.1.2.A	ITCS FLUID USE AND CHARGING – ITCS Fluid Use	N/A – No ITCS interfaces
3.5.1.2.B	ITCS FLUID USE AND CHARGING – Integrated Rack Charging	N/A – No ITCS interfaces
3.5.1.3.A	ITCS PRESSURE DROP – On–Orbit Interfaces	N/A – No ITCS interfaces
3.5.1.3.B	ITCS PRESSURE DROP – MPLM Interfaces	N/A – No ITCS interfaces
3.5.1.4.A	COOLANT FLOW RATE–MTL	N/A – No ITCS interfaces
3.5.1.4.B	COOLANT FLOW RATE–LTL	N/A – No ITCS interfaces
3.5.1.5.A	COOLANT SUPPLY TEMPERATURE–MTL	N/A – No ITCS interfaces
3.5.1.5.B	COOLANT SUPPLY TEMPERATURE–LTL	N/A – No ITCS interfaces
3.5.1.6.A	COOLANT RETURN TEMPERATURE	N/A – No ITCS interfaces
3.5.1.6.B	COOLANT RETURN TEMPERATURE	N/A – No ITCS interfaces
3.5.1.6.C	COOLANT RETURN TEMPERATURE	N/A – No ITCS interfaces
3.5.1.6.D	COOLANT RETURN TEMPERATURE	N/A – No ITCS interfaces
3.5.1.7.A	COOLANT MAXIMUM DESIGN PRESSURE–MTL	N/A – No ITCS interfaces
3.5.1.7.B	COOLANT MAXIMUM DESIGN PRESSURE–LTL	N/A – No ITCS interfaces
3.5.1.7.C	COOLANT MAXIMUM DESIGN PRESSURE–MPLM Temperature Loop	N/A – No ITCS interfaces
3.5.1.8	FAIL SAFE DESIGN	N/A – No ITCS interfaces
3.5.1.9.A	LEAKAGE	N/A – No ITCS interfaces
3.5.1.9.B	LEAKAGE	N/A – No ITCS interfaces

TABLE 4.2–1 APPLICABILITY MATRIX (CONTINUED)

IRD PARAGRAPH	IRD REQUIREMENT	PAYLOAD APPLICABILITY
3.5.1.10	QUICK–DISCONNECT AIR INCLUSION	N/A – No ITCS interfaces
3.5.1.11	RACK FRONT SURFACE TEMPERATURE	N/A – No ITCS interfaces
3.5.1.12	CABIN AIR HEAT LEAK	
3.5.1.13	MPLM CABIN AIR COOLING	N/A – No ITCS interfaces
3.5.1.14.A	SIMULTANEOUS COOLING	N/A – No ITCS interfaces
3.5.1.14.B	SIMULTANEOUS COOLING	N/A – No ITCS interfaces
3.5.1.15	CONTROL SYSTEM TIME CONSTANT	N/A – No ITCS interfaces
3.5.1.16	PAYLOAD COOLANT QUANTITY	N/A – No ITCS interfaces
3.5.1.17	PAYLOAD GAS INCLUSION	N/A – No ITCS interfaces
3.6	VACUUM SYSTEM REQUIREMENTS	
3.6.1	VACUUM EXHAUST SYSTEM (VES)/WASTE GAS SYSTEM (WGS) REQUIREMENTS	
3.6.1.1	VES/WGS PHYSICAL INTERFACE	
3.6.1.2.A	INPUT PRESSURE LIMIT	N/A – No VS interfaces
3.6.1.2.B	INPUT PRESSURE LIMIT	N/A – No VS interfaces
3.6.1.2.C	INPUT PRESSURE LIMIT	N/A – No VS interfaces
3.6.1.3	INPUT TEMPERATURE LIMIT	N/A – No VS interfaces
3.6.1.4	INPUT DEWPOINT LIMIT	N/A – No VS interfaces
3.6.1.5.A	ACCEPTABLE EXHAUST GASES	N/A – No VS interfaces
3.6.1.5.B	ACCEPTABLE EXHAUST GASES	N/A – No VS interfaces
3.6.1.5.C	ACCEPTABLE EXHAUST GASES	N/A – No VS interfaces
3.6.1.5.D	ACCEPTABLE EXHAUST GASES	N/A – No VS interfaces
3.6.1.5.1.A	ACCEPTABLE GASES - LIST	
3.6.1.5.1.B	ACCEPTABLE GASES - LIST	
3.6.1.5.1.C	ACCEPTABLE GASES - LIST	
3.6.1.5.2	EXTERNAL CONTAMINATION CONTROL	N/A – No VS interfaces

TABLE 4.2–1 APPLICABILITY MATRIX (CONTINUED)

IRD PARAGRAPH	IRD REQUIREMENT	PAYLOAD APPLICABILITY
3.6.1.5.3.A	INCOMPATIBLE GASES	N/A – No VS interfaces
3.6.1.5.3.B	INCOMPATIBLE GASES	N/A – No VS interfaces
3.6.1.6	PAYLOAD VACUUM SYSTEM ACCESS VALVE	N/A – No VS interfaces
3.6.2	VACUUM RESOURCE SYSTEM (VRS)/VACUUM VENT SYSTEM (VVS) REQUIREMENTS	
3.6.2.1	VRS/VVS PHYSICAL INTERFACE	
3.6.2.2.A	INPUT PRESSURE LIMIT	N/A – No VS interfaces
3.6.2.2.B	INPUT PRESSURE LIMIT	N/A – No VS interfaces
3.6.2.2.C	INPUT PRESSURE LIMIT	N/A – No VS interfaces
3.6.2.3	VRS/VVS THROUGH PUT LIMIT	N/A – No VS interfaces
3.6.2.4	ACCEPTABLE GASES	
3.7	PRESSURIZED GASES INTERFACE REQUIREMENTS	
3.7.1	NITROGEN INTERFACE REQUIREMENTS	
3.7.1.1	NITROGEN INTERFACE CONTROL	N/A – No Nitrogren interfaces
3.7.1.2	NITROGEN INTERFACE MDP	N/A – No Nitrogren interfaces
3.7.1.3	NITROGEN INTERFACE TEMPERATURE	N/A – No Nitrogren interfaces
3.7.1.4	NITROGEN LEAKAGE	N/A – No Nitrogren interfaces
3.7.1.5	NITROGEN PHYSICAL INTERFACE	
3.7.2	ARGON INTERFACE REQUIREMENTS	
3.7.2.1	ARGON INTERFACE CONTROL	N/A – No Argon interfaces
3.7.2.2	ARGON INTERFACE MDP	N/A – No Argon interfaces
3.7.2.3	ARGON INTERFACE TEMPERATURE	N/A – No Argon interfaces
3.7.2.4	ARGON LEAKAGE	N/A – No Argon interfaces
3.7.2.5	ARGON PHYSICAL INTERFACE	
3.7.3	CARBON DIOXIDE INTERFACE REQUIREMENTS	

TABLE 4.2–1 APPLICABILITY MATRIX (CONTINUED)

IRD PARAGRAPH	IRD REQUIREMENT	PAYLOAD APPLICABILITY
3.7.3.1	CARBON DIOXIDE INTERFACE CONTROL	N/A – No Carbon Dioxide interfaces
3.7.3.2	CARBON DIOXIDE INTERFACE MDP	N/A – No Carbon Dioxide interfaces
3.7.3.3	CARBON DIOXIDE INTERFACE TEMPERATURE	N/A – No Carbon Dioxide interfaces
3.7.3.4	CARBON DIOXIDE LEAKAGE	N/A – No Carbon Dioxide interfaces
3.7.3.5	CARBON DIOXIDE PHYSICAL INTERFACE	
3.7.4	HELIUM INTERFACE REQUIREMENTS	
3.7.4.1	HELIUM INTERFACE CONTROL	N/A – No Helium interfaces
3.7.4.2	HELIUM INTERFACE MDP	N/A – No Helium interfaces
3.7.4.3	HELIUM INTERFACE TEMPERATURE	N/A – No Helium interfaces
3.7.4.4	HELIUM LEAKAGE	N/A – No Helium interfaces
3.7.4.5	HELIUM PHYSICAL INTERFACE	
3.7.5	PRESSURIZED GAS SYSTEMS	N/A – No pressurized gas interfaces
3.7.6	MANUAL VALVES	N/A – No pressurized gas interfaces
3.8	PAYLOAD SUPPORT SERVICES INTERFACES REQUIREMENTS	
3.8.1	POTABLE WATER	
3.8.1.1	POTABLE WATER INTERFACE CONNECTION	
3.8.1.2	POTABLE WATER INTERFACE PRESSURE	N/A – No potable water interfaces
3.8.1.3.A	POTABLE WATER USE	N/A – No potable water interfaces
3.8.1.3.B	POTABLE WATER USE	N/A – No potable water interfaces
3.8.2	FLUID SYSTEM SERVICER	N/A – No potable water interfaces
3.9	ENVIRONMENT INTERFACE REQUIREMENTS	
3.9.1	ATMOSPHERE REQUIREMENTS	
3.9.1.1	PRESSURE	N/A [1]
3.9.1.2	TEMPERATURE	N/A [1]
3.9.1.3	HUMIDITY	N/A [1]
3.9.2	INTEGRATED RACK USE OF CABIN ATMOSPHERE	

TABLE 4.2–1 APPLICABILITY MATRIX (CONTINUED)

IRD PARAGRAPH	IRD REQUIREMENT	PAYLOAD APPLICABILITY
3.9.2.1.A	ACTIVE AIR EXCHANGE	N/A – MACE II is not a rack mounted payload
3.9.2.1.B	ACTIVE AIR EXCHANGE	A
3.9.2.2	OXYGEN CONSUMPTION	N/A – MACE II does not consume oxygen
3.9.2.3	CHEMICAL RELEASES	N/A – MACE II will not release chemicals
3.9.3	RADIATION REQUIREMENTS	
3.9.3.1	INTEGRATED RACK CONTAINED OR GENERATED IONIZING RADIATION	N/A – No radioactive materials contained or used
3.9.3.2	IONIZING RADIATION DOSE	
3.9.3.3	SINGLE EVENT EFFECT (SEE) IONIZING RADIATION	A
3.9.3.4	LAB WINDOW RACK LOCATION RADIATION REQUIREMENTS	
3.9.3.4.1	WINDOW RACK INFRARED RADIATION REQUIREMENTS	N/A – Not located at the Lab window
3.9.3.4.2	WINDOW RACK ULTRAVIOLET RADIATION REQUIREMENTS	N/A – Not located at the Lab window
3.9.4	ADDITIONAL ENVIRONMENTAL CONDITIONS	
3.10	FIRE PROTECTION INTERFACE REQUIREMENTS	
3.10.1	FIRE PREVENTION	A[2]
3.10.2	PAYLOAD MONITORING AND DETECTION REQUIREMENTS	
3.10.2.1	SMOKE DETECTION	
3.10.2.1.1.A	SMOKE DETECTOR	N/A – No Smoke Detector
3.10.2.1.1.B	SMOKE DETECTOR	N/A – No Smoke Detector
3.10.2.1.2	FORCED AIR CIRCULATION INDICATION	N/A – No Smoke Detector
3.10.2.1.3A	FIRE DETECTION INDICATOR	N/A – No Smoke Detector
3.10.2.1.3B	FIRE DETECTION INDICATOR	N/A – No Smoke Detector
3.10.2.2	PARAMETER MONITORING	
3.10.2.2.1	PARAMETER MONITORING USE	N/A – No fire detection
3.10.2.2.2	PARAMETER MONITORING RESPONSE	
3.10.2.2.2.1.A	PARAMETER MONITORING IN SUBRACK	N/A – No fire detection

TABLE 4.2–1 APPLICABILITY MATRIX (CONTINUED)

IRD PARAGRAPH	IRD REQUIREMENT	PAYLOAD APPLICABILITY
3.10.2.2.2.1.B	PARAMETER MONITORING IN SUBRACK	N/A – No fire detection
3.10.2.2.2.2.A	PARAMETER MONITORING IN INTEGRATED RACK	N/A – No fire detection
3.10.2.2.2.2.B	PARAMETER MONITORING IN INTEGRATED RACK	N/A – No fire detection
3.10.3	FIRE SUPPRESSION	
3.10.3.1.A	PORTABLE FIRE EXTINGUISHER	A
3.10.3.1.B	PORTABLE FIRE EXTINGUISHER	N/A – Panel thickness is not greater than 0.125 in.
3.10.3.2	FIRE SUPPRESSION ACCESS PORT ACCESSIBILITY	A
3.10.3.3	FIRE SUPPRESSANT DISTRIBUTION	A
3.10.4.A	LABELING	A
3.10.4.B	LABELING	N/A – No fire detection indicator
3.11	MATERIALS AND PARTS INTERFACE REQUIREMENTS	
3.11.1	MATERIALS AND PARTS USE AND SELECTION	A
3.11.1.1	COMMERCIAL PARTS	A
3.11.2.A	FLUIDS	N/A – No ISS fluid interfaces
3.11.2.B	FLUIDS	N/A – No ISS fluid interfaces
3.11.2.C	FLUIDS	N/A – No ISS fluid interfaces
3.11.3	CLEANLINESS	A
3.11.4	FUNGUS RESISTANT MATERIAL	N/A – On orbit less than one year
3.12	HUMAN FACTORS INTERFACE REQUIREMENTS	
3.12.1.A	STRENGTH REQUIREMENTS	A
3.12.1.B	STRENGTH REQUIREMENTS	A
3.12.2	BODY ENVELOPE AND REACH ACCESSIBILITY	
3.12.2.1	ADEQUATE CLEARANCE	A
3.12.2.2.A	ACCESSIBILITY	A
3.12.2.2.B	ACCESSIBILITY	A
3.12.2.3	FULL SIZE RANGE ACCOMMODATION	A
3.12.3	HABITABILITY	
3.12.3.1	HOUSEKEEPING	
3.12.3.1.1	CLOSURES OR COVERS	A
3.12.3.1.2.A	BUILT-IN CONTROL	N/A – No liquids or paticulates

TABLE 4.2–1 APPLICABILITY MATRIX (CONTINUED)

IRD PARAGRAPH	IRD REQUIREMENT	PAYLOAD APPLICABILITY
3.12.3.1.2.B	BUILT-IN CONTROL	N/A – No liquids or particulates
3.12.3.1.3	DELETED	
3.12.3.1.4	DELETED	
3.12.3.1.5	ONE-HANDED OPERATION	A
3.12.3.2	TOUCH TEMPERATURE	
3.12.3.2.1	CONTINUOUS/INCIDENTAL CONTACT - HIGH TEMPERATURE	A
3.12.3.2.2	CONTINUOUS/INCIDENTAL CONTACT - LOW TEMPERATURE	A
3.12.3.3	ACOUSTIC REQUIREMENTS	
3.12.3.3.1.A	CONTINUOUS NOISE LIMITS – Subracks not changed out	N/A – Not a continuous noise source
3.12.3.3.1.B	CONTINUOUS NOISE LIMITS – Subracks changed out	N/A – Not a continuous noise source
3.12.3.3.1.C	CONTINUOUS NOISE LIMITS – Independently operated equipment	N/A – Not a continuous noise source
3.12.3.3.2	INTERMITTENT NOISE LIMITS	E–02
3.12.3.4.A	LIGHTING DESIGN	A
3.12.3.4.B	LIGHTING DESIGN	A
3.12.3.4.C	LIGHTING DESIGN	N/A – No light sources
3.12.3.4.D	LIGHTING DESIGN	N/A – No light sources
3.12.3.4.E	LIGHTING DESIGN	A
3.12.4	STRUCTURAL/MECHANICAL INTERFACES	
3.12.4.1	DELETED	
3.12.4.2	PAYLOAD HARDWARE MOUNTING	
3.12.4.2.1	EQUIPMENT MOUNTING	A
3.12.4.2.2	DRAWERS AND HINGED PANELS	N/A – No drawer or hinged panels
3.12.4.2.3	DELETED	
3.12.4.2.4	DELETED	
3.12.4.2.5	ALIGNMENT	N/A – No blindmate connectors
3.12.4.2.6	SLIDE-OUT STOPS	N/A – No slides or pivot mounts
3.12.4.2.7	PUSH-PULL FORCE	N/A – No capture–type receptacles

TABLE 4.2–1 APPLICABILITY MATRIX (CONTINUED)

IRD PARAGRAPH	IRD REQUIREMENT	PAYLOAD APPLICABILITY
3.12.4.2.8	ACCESS	N/A – No access required
3.12.4.2.8.1	COVERS	N/A – No access required
3.12.4.2.8.2	SELF-SUPPORTING COVERS	N/A – No access required
3.12.4.2.8.3	DELETED	
3.12.4.2.8.4	UNIQUE TOOLS	N/A – No unique tools
3.12.4.3	CONNECTORS	
3.12.4.3.1	ONE-HANDED OPERATION	N/A –
3.12.4.3.2.A	ACCESSIBILITY	A
3.12.4.3.2.B	ACCESSIBILITY	A
3.12.4.3.3.A	EASE OF DISCONNECT	A
3.12.4.3.3.B	EASE OF DISCONNECT	A
3.12.4.3.4	INDICATION OF PRESSURE/FLOW	N/A – No liquid or gas lines
3.12.4.3.5	SELF LOCKING	A
3.12.4.3.6.A	CONNECTOR ARRANGEMENT	A
3.12.4.3.6.B	CONNECTOR ARRANGEMENT	A
3.12.4.3.7	ARC CONTAINMENT	A
3.12.4.3.8	CONNECTOR PROTECTION	A
3.12.4.3.9	CONNECTOR SHAPE	A
3.12.4.3.10	FLUID AND GAS LINE CONNECTORS	N/A – No fluid gas connectors
3.12.4.3.11.A	ALIGNMENT MARKS OR GUIDE PINS	A
3.12.4.3.12.A	CODING	A
3.12.4.3.12.B	CODING	A
3.12.4.3.13	PIN IDENTIFICATION	A
3.12.4.3.14	ORIENTATION	A
3.12.4.3.15.A	HOSE/CABLE RESTRAINTS	A
3.12.4.3.15.B	HOSE/CABLE RESTRAINTS	A
3.12.4.3.15.C	HOSE/CABLE RESTRAINTS	
3.12.4.3.15.D	HOSE/CABLE RESTRAINTS	A
3.12.4.4	FASTENERS	
3.12.4.4.1	NON–THREADED FASTENERS STATUS INDICATION	A
3.12.4.4.2	MOUNTING BOLT/FASTENER SPACING	A
3.12.4.4.3	DELETED	
3.12.4.4.4.A	MULTIPLE FASTENERS	A
3.12.4.4.5	CAPTIVE FASTENERS	A

TABLE 4.2–1 APPLICABILITY MATRIX (CONTINUED)

IRD PARAGRAPH	IRD REQUIREMENT	PAYLOAD APPLICABILITY
3.12.4.4.6.A	QUICK RELEASE FASTENERS	A
3.12.4.4.6.B	QUICK RELEASE FASTENERS	A
3.12.4.4.7	THREADED FASTENERS	A
3.12.4.4.8.A	OVER CENTER LATCHES – NONSELF–LATCHING	A
3.12.4.4.8.B	OVER CENTER LATCHES – LATCH LOCK	A
3.12.4.4.8.C	OVER CENTER LATCHES – LATCH HANDLES	A
3.12.4.4.9	WINGHEAD FASTENERS	A
3.12.4.4.10	DELETED	
3.12.4.4.11.A	FASTENER HEAD TYPE	N/A – No crew actuation
3.12.4.4.11.B	FASTENER HEAD TYPE	A
3.12.4.4.11.C	FASTENER HEAD TYPE	N/A – No hard–mounted equipment
3.12.4.4.12	ONE-HANDED ACTUATION	A
3.12.4.4.13	DELETED	
3.12.4.4.14	ACCESS HOLES	A
3.12.5	CONTROLS AND DISPLAYS	
3.12.5.1	CONTROLS SPACING DESIGN REQUIREMENTS	A
3.12.5.2	ACCIDENTAL ACTUATION	
3.12.5.2.1	PROTECTIVE METHODS	A
3.12.5.2.2	NONINTERFERENCE	A
3.12.5.2.3	DEAD-MAN CONTROLS	
3.12.5.2.4	BARRIER GUARDS	A
3.12.5.2.5	RECESSED SWITCH PROTECTION	A
3.12.5.2.6	DELETED	
3.12.5.2.7	POSITION INDICATION	A
3.12.5.2.8	HIDDEN CONTROLS	A
3.12.5.2.9	HAND CONTROLLERS	A
3.12.5.3.A	VALVE CONTROLS – LOW TORQUE VALVES	N/A – No valves
3.12.5.3.B	VALVE CONTROLS – INTERMEDIATE TORQUE VALVES	N/A – No valves
3.12.5.3.C	VALVE CONTROLS – HIGH TORQUE VALVES	N/A – No valves
3.12.5.3.D	VALVE CONTROLS – HANDLE DIMENSIONS	N/A – No valves
3.12.5.3.E	VALVE CONTROLS – ROTARY VALVE CONTROLS	N/A – No valves
3.12.5.4	TOGGLE SWITCHES	A
3.12.6	RESTRAINTS AND MOBILITY AIDS	A
3.12.6.1.A	STOWAGE DRAWER CONTENTS RESTRAINTS	N/A – No drawers or trays
3.12.6.1.B	STOWAGE DRAWER CONTENTS RESTRAINTS	N/A – No drawers or trays

TABLE 4.2–1 APPLICABILITY MATRIX (CONTINUED)

IRD PARAGRAPH	IRD REQUIREMENT	PAYLOAD APPLICABILITY
3.12.6.1.C	STOWAGE DRAWER CONTENTS RESTRAINTS	N/A – No drawers or trays
3.12.6.2.A	STOWAGE AND EQUIPMENT DRAWERS/TRAYS	N/A – No drawers or trays
3.12.6.2.B	STOWAGE AND EQUIPMENT DRAWERS/TRAYS	N/A – No drawers or trays
3.12.6.3	CAPTIVE PARTS	A
3.12.6.4	HANDLE AND GRASP AREA DESIGN REQUIREMENTS	
3.12.6.4.1	HANDLES AND RESTRAINTS	A
3.12.6.4.2	DELETED	
3.12.6.4.3	HANDLE LOCATION/FRONT ACCESS	A
3.12.6.4.4	HANDLE DIMENSIONS	A
3.12.6.4.5.A	NON-FIXED HANDLES DESIGN REQUIREMENTS	A
3.12.6.4.5.B	NON-FIXED HANDLES DESIGN REQUIREMENTS	A
3.12.6.4.5.C	NON-FIXED HANDLES DESIGN REQUIREMENTS	A
3.12.7	IDENTIFICATION LABELING	A
3.12.8	COLOR	A
3.12.9	CREW SAFETY	
3.12.9.1.A	ELECTRICAL HAZARDS	
3.12.9.1.B	ELECTRICAL HAZARDS	A
3.12.9.1.C	ELECTRICAL HAZARDS	A
3.12.9.1.D	ELECTRICAL HAZARDS	A
3.12.9.1.E	ELECTRICAL HAZARDS	A
3.12.9.1.1	MISMATCHED	A
3.12.9.1.2	DELETED	
3.12.9.1.3	DELETED	
3.12.9.1.4	OVERLOAD PROTECTION	
3.12.9.1.4.1	DEVICE ACCESSIBILITY	A
3.12.9.1.4.2	EXTRACTOR -TYPE FUSE HOLDER	N/A –
3.12.9.1.4.3	OVERLOAD PROTECTION LOCATION	A
3.12.9.1.4.4	OVERLOAD PROTECTION IDENTIFICATION	A
3.12.9.1.4.5	AUTOMATIC RESTART PROTECTION	A
3.12.9.2	SHARP EDGES AND CORNERS PROTECTION	A
3.12.9.3	HOLES	A
3.12.9.4	LATCHES	A
3.12.9.5	SCREWS AND BOLTS	A
3.12.9.6	SECURING PINS	A
3.12.9.7	LEVERS, CRANKS, HOOKS, AND CONTROLS	A
3.12.9.8	BURRS	A

TABLE 4.2–1 APPLICABILITY MATRIX (CONTINUED)

IRD PARAGRAPH	IRD REQUIREMENT	PAYLOAD APPLICABILITY
3.12.9.9.A	LOCKING WIRES	A
3.12.9.9.B	LOCKING WIRES	N/A – No fracture–critical fasteners
3.12.9.10.A	AUDIO DEVICES (DISPLAYS)	N/A – No audio devices
3.12.9.10.B	DELETED	
3.12.9.10.C	AUDIO DEVICES (DISPLAYS)	N/A – No audio devices
3.12.9.10.D	AUDIO DEVICES (DISPLAYS)	N/A – No audio devices
3.12.9.11	DELETED	
3.12.9.12	EGRESS	A
3.12.10	PAYLOAD IN-FLIGHT MAINTENANCE	N/A – No in–flight maintenance

Note [1] Applicable Node 1 requirements are identified in paragraphs 3.5.1.1, 3.5.1.2, and 3.5.1.3. These requirements will be verified, to the limits specified in this ICD, as specified in SSP 57000, paragraphs 4.3.9.1.1, 4.3.9.1.2, and 4.3.9.1.3 respectively.

Note [2] Compliance with fire protection requirements will be considered complete following approval of the hazard report by the Payload Safety Review Panel (PSRP).

5.0 EXCEPTIONS

A summary description and rationale is provided in Table 5–1 for each exception to an IRD requirement identified in Table 4.2–1.

TABLE 5–1 EXCEPTIONS

IRD/ICD PARAGRAPH NUMBER	CLASSIFICATION	IDENTIFIER	DESCRIPTION	RATIONALE	STATUS
3.2.2.4/3.2.2	Exception	E–01	Test data shows the MACE II Power Converter exceeds the allowable surge current limit defined in SSP 57000, Revision E.	MACE II requests an exception in lieu of redesign for early flights, with an operational restriction that other loads connect to the UOP with MACE II Power Converter shall meet the Multiple Load Certification requirements in paragraph 3.5.1 of SSP 52051.	CLOSED 57235–NA–0002
3.12.3.3.2/3.5.2.1	Exception	E–02	An acoustics test performed on the MACE II payload indicated that the A–weighted acoustic noise was 65 dBA.	Payloads with intermittent A–weighted noise levels exceeding 65 dBA are limited to only one hour of operation every 24 hours. The MACE II payload will require operation for up to 90 minutes within a 24–hour period in order to accomplish all of the science objectives. One of the science protocols is designed to last for 70 minutes and could potentially require an additional 15 minutes of run time to spin–up the reaction wheels within the gyroscopes. During operation between Flights 4A and 5A.1 there will be a minimum amount of payload and systems hardware on–board ISS to contribute to the noise levels. MACE II will only need to operate beyond the approved one–hour constraint when the science requires that the longest of the protocols be operated.	CLOSED 57235–NA–0001

5.1 APPROVED EXCEPTIONS

5.1.1 EXCEPTION FOR MACE II ACOUSTIC DEVIATION

APPLICABLE IRD SECTION:

3.12.3.3.2 INTERMITTENT NOISE LIMITS

MACE EXCEPTION:

The MACE II payload shall meet the noise duration and sound pressure limits defined in Table 1. The payload noise duration is the total time that the payload will operate within a 24 hour period.

TABLE 5.1.1–1 MACE II INTERMITTENT NOISE LIMITS

MACE II Noise Limits Measured at 0.6 meters distance from the test article	
Maximum Noise Duration	**Total A–weighted SPL (dBA)**
90 minutes	65

RATIONALE:

The integrated noise level in Node 1 with MACE II operating is projected to be 67 dBA, including the 58 dBA caused by Node 1 subsystems (see Figure 1). This is well below established Flight Rules, which require hearing protection at noise levels of 75 dBA and above.

At 67 dBA, speech communication should be adequate with a normal voice up to about 3 feet, and a raised voice should be required at about 6 feet. See Figure 2. Based on measured USL Caution/Warning tone data, tone audibility should be adequate at Stage 5A when the US Lab is on–orbit and the C/W system is activated. No information on FGB C/W tone levels is available, however. Thus, for MACE II operations between 4A and 5A, C/W tone audibility is uncertain. An on–orbit tone audibility test could be performed, but the Crew Office has indicated that such a test is not required and that the results would not likely change the planned operations for MACE–II.

AUTHORITY:

57235–NA–0001A

EFFECTIVITY:

MACE II operations in Node 1 from Stage 2A.2B to 5A.1.

5.1.2 SURGE CURRENT EXCEPTION FOR MACE II POWER CONVERTER

APPLICABLE IRD SECTION:

3.2.2.4 SURGE CURRENT

MACE EXCEPTION:

MACE II Power Converter surge current shall not exceed the limits defined in Table 1:

TABLE 5.1.2–1 MACE II POWER SUPPLY SURGE CURRENT LIMITS

	Duration	Maximum Surge Current (Amp)	Maximum Current Rate of Change (Amps/msec)
MACE II	$t \leq 9.47$ms	22.95	185.3

RATIONALE:

The MACE II has surge current that is current limited by the RPCM at 13.2 to 14.4 Amps. The MACE II maximum inrush current transient is 22.95 Amps with a rise time is 112.6 µs, the fall time is 9.359 ms which is less than the 10 ms requirement by SSP 57000, paragraph 3.2.2.4. Therefore, the RPCM (feeding UOP) is in the current limiting, but it does not exceed the trip duration of 31–38 milliseconds.

The MACE II is not certified for multiple load connections to UOP based on the SSP 52051, Volume 1, paragraph 3.5. When the MACE II is operated with another load, the other load must meet the multiple load certification requirement in SSP 52051, paragraph 3.5 in order to assure normal operation. There is a risk that the inrush of the MACE II, in combination with the inrush to an adjacent load, could cause the RPCM to exceed its current limit, and cause voltage dropout. The EPS Board has developed informal guidelines for two loads on a UOP, and the MACE II does not meet these guidelines.

The MACE II hardware will briefly (> 30 ms.) draw between 4 and 5 amperes (maximum) during certain operating conditions. This is within the capability of the Node 1 UOPs provided that no other loads are drawing power from these UOPs at the same time.

AUTHORITY:

57235–NA–0002

EFFECTIVITY:

MACE II operations in Node 1 from Stage 2A.2B to 5A.1.

(This Page Intentionally Left Blank)

APPENDIX A
ABBREVIATIONS AND ACRONYMS

ac	Alternating Current
amps	Amperes
APM	Attached Pressurized Module
APS	Automated Payload Switch
ARIS	Active Rack Isolation System
ARPC	Auxiliary Remote Power Controller
BPDU	Bitstream Protocol Data Unit
C	Centigrade
C&DH	Command & Data Handling
CCSDS	Consultative Committee for Space Data Systems
CAM	Centrifuge Accommodations Module
cg	Center of Gravity
COF	Columbus Orbiting Facility
dB	deciBel
dBm	deciBels Referenced to One Milliwatt
dc	Direct Current
DFRC	Dryden Flight Research Center
EEE	Electrical, Electronic, and Electromechanical
EF	Exposed Facility
EMC CS–01, 02	Electromagnetic Compatibility; Conducted Susceptibility –01 (CS–01), Conducted Susceptibility –02 (CS–02)
EMI	Electromagnetic Interference
EPCE	Electrical Power Consuming Equipment
EPS	Electrical Power System
ESA	European Space Agency
ESM	Experiment Support Module
EVA	Extra Vehicular Activity

F	Fahrenheit
FSS	Fluid System Servicer
FWHM	Full Width Half Maximum
GFCI	Ground Fault Circuit Interrupter
GSE	Ground Support Equipment
HRDL	High Rate Data Link
HRFM	High Rate Frame Multiplexer
hr	hour
Hz	Hertz
ICD	Interface Control Document
IDD	Interface Design Document
IEC	International Electro Technical Commission
IEEE	Institute of Electrical and Electronic Engineers
IRD	Interface Requirements Document
ISO	International Standards Organization
ISPR	International Standard Payload Rack
ISS	International Space Station
ITCS	Internal Thermal Control System
JEM	Japanese Experiment Module
kg	kilograms
kHz	kiloHertz
kPa	kiloPascal
KSC	Kennedy Space Center
kW	kiloWatt
LAN	Local Area Network
lbm	pounds mass
LRDL	Low Rate Data Link
LSB	Least Significant Bit
LTL	Low Temperature Loop

mA	milliAmperes
MCC	Mission Control Center
MDM	Multiplexer–Demultiplexer
MDP	Maximum Design Pressure
MIL–STD	Military Standard
MPLM	Mini Pressurized Logistics Module
MRDL	Medium Rate Data Link (Ethernet)
MSB	Most Significant Bit
MSFC	Marshall Space Flight Center
MTL	Moderate Temperature Loop
N/A	Not Applicable
NASA	National Aeronautics and Space Administration
NASDA	National Space Development Agency of Japan
NSTS	National Space Transportation System
NTSC	National Television Systems Committee
ORU	Orbital Replacement Unit
Pa	Pascal
PCS	Portable Computer System
PFE	Portable Fire Extinguisher
PFM	Pulse Frequency Modulation
PIA	Payload Interface Agreement
PIRN	Preliminary/Proposed Interface Revision Notice
PL	Payload
PN	Part Number
psia	pounds per square inch absolute
psid	pounds per square inch differential
QD	Quick Disconnect
R/FR	Refrigerator/Freezer
Rev	Revision

RHA	Rack Handling Adapter
RID	Rack Insertion Device
RMS	Remote Manipulator System
RPC	Remote Power Controller
RPCS	Remote Power Controllers
RSC	Rack Shipping Container
RT	Remote Terminal
SEE	Single Event Effect
SI	International System of Units
SSC	Station Support Computer
SSP	Space Station/Shuttle Program
SSPC	Solid State Power Controller
SSQ	Space Station Qualified
SUP	Standard Utility Panel
TBC	To Be Confirmed
TBD	To Be Determined
TCS	Thermal Control System
UIP	Utility Interface Panel
UOP	Utility Outlet Panel
USL	United States Laboratory
VES	Vacuum Exhaust System
VRS	Vacuum Resource System
VTR	Video Tape Recorder
VVS	Vacuum Vent System
WFSV	Water Flow Selectability Valve
WGS	Waste Gas System

APPENDIX B
GLOSSARY OF TERMS

Access Port: Hole that allows penetration of the Portable Fire Extinguisher nozzle

Active Air Exchange: Forced convection between two volumes. For example, forced convection between a subrack payload and the internal volume of an integrated rack, or forced convection between a subrack payload and the cabin air.

Deviation: Uniquely defined for Payloads Processes; refer to Section 5.1 of this document.

Exceedance: Uniquely defined for Payloads Processes; refer to Section 5.1 of this document.

Exception: Uniquely defined for Payloads Processes; refer to Section 5.1 of this document.

Non-Normal: Pertaining to performance of the Electrical Power System outside the nominal design due to ISS system equipment failure, fault clearing, or overload conditions.

Operate: Perform intended design functions given specified conditions.

Safety-Critical: Having the potential to be hazardous to the safety of hardware, software, and/or personnel.

Waiver: Uniquely defined for Payloads Processes; refer to Section 5.1 of this document.

(This Page Intentionally Left Blank)